Jackson®

Warewashing Systems

INSTALLATION, OPERATION, AND SERVICE MANUAL

ENERGY STAR

DISHSTAR® HT-E

DISHSTAR SERIES UNDERCOUNTER DISHMACHINES

DishStar HT-E/HT-E-SEER Manual • 07610-004-43-79-T

MANUFACTURER'S LIMITED WARRANTY
(APPLICABLE ONLY IN THE UNITED STATES AND CANADA)

WARRANTY REGISTRATION:

To register your Jackson Dishmachine's warranty go to **jacksonwws.com/warranty** or call 1-888-800-5672. Failure to register the Dishmachine will void the warranty.

ONE YEAR LIMITED PARTS AND LABOR WARRANTY

For a period of one (1) year from date of original installation of a new Jackson Dishmachine (but in no event to exceed eighteen (18) months from date of shipment from Jackson's factory), Jackson WWS, Inc. (Jackson) will repair or replace, at its discretion, any original part that proves defective in materials or workmanship at the time the Dishmachine was purchased; provided that (i) the Dishmachine has not been altered, (ii) the Dishmachine has been properly installed, maintained, and operated under normal use conditions and in accordance with the applicable installation, operation and service manual available on the Jackson website, and (iii) a warranty claim is reported to a Jackson Authorized Service Agency within the warranty period. This warranty includes replacement with Jackson specified genuine replacement parts, purchased directly from a Jackson Authorized Parts Distributor or Service Agency. Use of generic replacement parts may create a hazard and shall void this warranty.

THIS WARRANTY DOES NOT APPLY OUTSIDE THE UNITED STATES AND CANADA.

Jackson will pay the labor to repair or replace a defective original part as a part of the warranty, provided that a Jackson Authorized Service Agency performs the labor. Any repair or replacement work by anyone other than a Jackson Authorized Service Agency is the sole responsibility of the purchaser. Labor coverage is limited to regular hourly rates; Jackson will not pay overtime premiums or emergency service charges.
Accessory components (such as table limit switches, pressure regulators, and drain water tempering kits) that are not installed by Jackson at the factory and are shipped with the Dishmachine carry only a (1) one-year parts warranty. Labor to repair or replace these components is not included in the warranty or covered by Jackson. Booster heaters not manufactured by Jackson are not covered by this warranty but are warranted by their respective manufacturers.
This warranty is void if any defect or failure is a direct result from shipping, handling, fire, water, accident, alteration, modification, misuse, abuse, flood, acts of God, burglary, casualty, attempted repair by unauthorized persons, use of replacement parts not authorized by Jackson, improper installation, installation not in accordance with local electrical and plumbing codes, if the serial number has been removed or altered, if the Dishmachine is used for any purpose other than originally intended, or if the equipment is installed for residential use.
Jackson does not authorize any other entity or person, including, without limitation, any entity or person who deals in Jackson Dishmachines, to change this warranty or create any other obligation in connection with Jackson Dishmachines.

TRAVEL LIMITATIONS:

Jackson limits warranty travel time to the customer site within 50 miles of the Jackson authorized service agent's office and during regular business hours. Jackson will not pay for travel time and mileage that exceeds these limits, or any fees such as those for air or boat travel without prior authorization.

REPLACEMENT PARTS WARRANTY:

For a period of (90) ninety days from the date of installation by a Jackson Authorized Service Agency (but in no event to exceed (180) one-hundred-eighty days from the date of purchase from a Jackson Authorized Parts Distributor or Service Agency), Jackson will repair or replace, at its discretion, any Jackson genuine replacement parts that prove defective in materials or workmanship at the time the replacement parts were installed. This warranty does not include paying the labor to repair or replace the replacement part. This warranty is subject to all conditions, exclusions and limitations applicable to the Dishmachine.

MANUFACTURER'S LIMITED WARRANTY (CONT.)
(APPLICABLE ONLY IN THE UNITED STATES AND CANADA)

PRODUCT CHANGES:

Jackson reserves the right to make changes in design and specification of any component of the Dishmachine as engineering or necessity requires.

DISCLAIMER OF WARRANTIES:

THERE ARE NO WARRANTIES, EXPRESSED OR IMPLIED, INCLUDING, WITHOUT LIMITATION, ANY IMPLIED WARRANTY OF FITNESS FOR A PARTICULAR PURPOSE OR MERCHANTABILITY, THAT ARE NOT SET FORTH HEREIN, OR THAT EXTEND BEYOND THE DURATION HEREOF.

LIMITATION OF REMEDIES AND LIABILITIES:

YOUR SOLE AND EXCLUSIVE REMEDY UNDER THIS LIMITED WARRANTY SHALL BE PRODUCT REPAIR OR REPLACEMENT AS PROVIDED HEREIN.

UNDER NO CIRCUMSTANCES WILL JACKSON BE LIABLE FOR ANY INCIDENTAL OR CONSEQUENTIAL DAMAGES, OR FOR DAMAGES IN THE NATURE OF PENALTIES. JACKSON'S LIABILITY ON ANY CLAIM OF ANY KIND WITH RESPECT TO THE GOODS OR SERVICES COVERED HEREUNDER SHALL IN NO CASE EXCEED THE PRICE OF THE GOODS OR SERVICES OR PART THEREOF WHICH GIVES RISE TO THE CLAIM.

ITEMS NOT COVERED:

THIS WARRANTY DOES NOT COVER (1) ADJUSTMENTS INCLUDING, BUT NOT LIMITED TO, TIMER CAMS, THERMOSTATS, DOORS, TANK HEATER ADJUSTMENTS OR CLUTCHES; (2) AIR FREIGHT OR OVERNIGHT FREIGHT; (3) ANY AMOUNT EXCEEDING ORIGINAL PURCHASE PRICE; (4) CLEANING OF DRAIN VALVES, GAS LINES, RINSE/WASH NOZZLES, STRAINERS, SCREENS, OR SPRAY PIPES; (5) CLEANING OR DELIMING OF THE DISHMACHINE OR ANY COMPONENT INCLUDING, BUT NOT LIMITED TO, WASH ARMS, RINSE ARMS AND STRAINERS; (6) CONDITIONS CAUSED BY THE USE OF INCORRECT (NON-COMMERCIAL) GRADE DETERGENTS; (7) CORROSION FROM CHEMICALS DISPENSED IN EXCESS OF RECOMMENDED CONCENTRATIONS; (8) COSMETIC DAMAGE, INCLUDING BUT NOT LIMITED TO, SCRATCHES, DENTS, CHIPS, AND OTHER DAMAGE TO THE DISHMACHINE FINISHES, UNLESS SUCH DAMAGE RESULTS FROM DEFECTS IN MATERIALS AND WORKMANSHIP AND IS REPORTED TO JACKSON WITHIN (30) THIRTY DAYS FROM THE DATE OF INSTALLATION; (9) DAMAGE CAUSED BY LABOR DISPUTE; (10) DAMAGES RESULTING FROM IMPROPER CONNECTION TO UTILITY SERVICE; (11) DAMAGES RESULTING FROM WATER CONDITIONS, INADEQUATE OR EXCESSIVE WATER PRESSURE, ACCIDENTS, ALTERATIONS, IMPROPER USE, ABUSE, HANDLING, OVERLOADS, TAMPERING, IMPROPER INSTALLATION OR FAILURE TO FOLLOW MAINTENANCE AND OPERATING PROCEDURES; (12) DISCOLORATION, RUST OR OXIDATION OF SURFACES RESULTING FROM CAUSTIC OR CORROSIVE ENVIRONMENTS, INCLUDING, BUT NOT LIMITED TO, HIGH SALT CONCENTRATIONS, HIGH MOISTURE OR HUMIDITY, OR EXPOSURE TO CHEMICALS; (13) ELECTRIC BOOSTERS, FEED LINES, FLEX HOSE, FUSES, GARBAGE DISPOSALS, OR GAS PILOTS; (14) EXCESSIVE LIME, MINERAL, OR ALKALINE BUILDUP; (15) EXPENSES DUE TO DISCONNECTION, DELIVERY, RETURN AND REINSTALLATION; (16) FAILURE OF ELECTRICAL COMPONENTS DUE TO CONNECTION OF CHEMICAL DISPENSING EQUIPMENT INSTALLED BY OTHERS; (17) FAILURE OF FACILITY WATER HEATER TO MAKE TEMPERATURE; (18) FAILURE TO MAINTAIN WATER HARDNESS LOWER THAN 3.0 GRAINS, PH BETWEEN 7.0 AND 8.5 AND TOTAL DISSOLVED SOLIDS BELOW 250 PPM; (19) FAILURE TO COMPLY WITH LOCAL ELECTRICAL BUILDING CODES; (20) LEAKS OR DAMAGE RESULTING FROM SUCH LEAKS CAUSED BY THE INSTALLER, INCLUDING THOSE AT MACHINE TABLE CONNECTIONS, OR BY CONNECTION OF CHEMICAL DISPENSING EQUIPMENT INSTALLED BY OTHERS; (21) OPENING OR CLOSING OF UTILITY SUPPLY VALVES OR SWITCHING OF ELECTRICAL SUPPLY CURRENT; (22) PERFORMANCE OF REGULAR MAINTENANCE AND CLEANING AS OUTLINED IN THE OPERATOR'S GUIDE; (23) REMOVAL OR REINSTALLATION OF INACCESSIBLE DISHMACHINES OR BUILT-IN FIXTURES THAT INTERFERE WITH SERVICING, REMOVAL OR REPLACEMENT OF THE DISHMACHINE; (24) REPLACEMENT WEAR ITEMS INCLUDING, BUT NOT LIMITED TO, CURTAINS, DRAIN BALLS, DOOR GUIDES, GASKETS, O-RINGS, SEALS, SQUEEZE TUBES, AND BEARINGS; (25) RESIDENTIAL USE; (26) USE WITH UTILITY SERVICE OTHER THAN THAT DESIGNATED ON THE RATING PLATE.

REVISION HISTORY

Revision	Date	Made by	Process	Details
A	4-11-17	JH	N/A	Initial release of the manual.
B	4-27-17	JH	N/A	Corrected pg. 2. Updated pg. 4 due to heaters not running simultaneously. Added description of the three cycles to the Operation section. Replaced item #14 on pg. 27 with new P/N. Added 1/4" brass plug to the rinse tank. Changed rinse heater P/N to 04540-004-45-12 on pg. 39. Added wash heater, thermostat, probe, and fitting to pg. 44. Updated the schematic to revision B.
C	6-4-17	JH	8523	Added the 460 V machine to the manual.
D	9-5-17	JH	8532	Updated depiction of the air-gap on pg. 6. Removed references to "screen" on pg. 20. Added communication cable (05700-004-33-64) to pg. 24. Corrected chemical tubes on pg. 28 and added tube length and color. Removed fill line (05700-002-62-37) from wash hub on pg. 33. Replaced 7/8" discharge hose with 5/8" discharge hose (05700-004-46-28) on pg. 33. Updated view of inlet plumbing on pg. 37 to show angle of elbow and adapter.
E	1-15-18	JH	8537 8574	Added the HT-E-SEER to the manual. Updated the Door Assembly pages. Added item #10 on pg. 48. Corrected P/N for item #10 on pg. 52.
F	2-5-19	JH	8585 8599 8619 8648	Added PRV to view on pg. 3. Added note about hot water heaters to pg. 7. Added motor rotation section to pg. 9. Added programming instructions and fault codes to pgs. 22–26. Updated P/N for item #2 on pg. 29. Updated pg. 31 to show panel and membrane together. Added item #14 on pg. 33. Updated item #11 on pg. 40. Added Door Interlock to pg. 41. Changed rinse arm bearing assembly on pg. 44. Changed rinse arm bearing kit P/N on pg. 44. Updated SEER plumbing, pgs. 48–49. Added note about water connection point to pg. 48. Updated pgs. 54–55. Added back panel and gaskets to pg. 56. Added new drain water tempering kit and 460 V drain water tempering kit to pg. 57. Updated schematics on pgs. 58–59.
G	4-24-19	JH	19-553	Updated 208-230 V schematic.
H	5-4-20	JH	8664 8709 8721 19-730	Revised Programming Chemical Feeder Pumps section. Updated pump assemblies on pgs. 38-39. Added drip shield and gasket to pg. 39. Updated P/N for item #12 on pg. 57. Added wash heater gasket to pg. 59. Updated SEER System pages.
J	11-16-20	JH	N/A	Revised drain line size. Updated dimensional drawing. Added F12 in Fault Codes section. Corrected P/N of Item #8 on pg. 33. Adjusted quantities on pg. 42. Updated Item #3 on pg. 46.
K	2-5-21	JH	8810	Changed Priming Chemical Feeder Pumps section. Added spacer and updated blower wheel P/N on SEER System pages.
L	6-28-21	JH	8808 20-931	Updated Fault Codes section. Changed pressure regulator on SEER unit. Updated rinse plumbing assembly. Removed resistor and bracket from electrical panels.
M	12-17-21	JH	N/A	Updated water consumption per Energy Star 3.0 report. Revised Electrical Requirements section. Corrected P/N for 460 V door interlock solenoid. Added description of Energy Saver Mode.
N	3-8-22	JH	N/A	Updated Operating Parameters section to show with and without load time. Corrected Electrical Requirements section and added MCA/MOP. Changed P/N of item #8 on pg. 33. Updated view in Chemical Feeder Pumps section. Changed P/N of item #11 on pg. 45. Added Motors page. Added gasket to SEER System page. Added Frame page.
P	5-5-22	JH	22-1201 22-1202	Removed water hardness test strip. Updated Chemical Feeder Pumps section with black dot roller. Corrected Rinse Tank section to show plumbing.
Q	6-8-22	JH	8888	Removed universal timer from 208-230 V. Combined 208-230 V HT-E and HT-E SEER electrical panels into one control panel with new I/O module. Added new chemical feeder pumps for 208-230 V. Added new door interlock for HT-E-SEER 208-230 V. Updated 208-230 V schematic.
R	7-5-22	JH	N/A	Added program number for each model to the Programming section.
S	11-18-22	JH	8901 22-1445 22-1503	Removed universal timer from 460 V. Combined 460 V HT-E and HT-E SEER electrical panels into one control panel. Removed old 460 V chemical feeder pumps and door interlock. Changed tubing. Updated peri-pumps to black components. Updated 460 V schematic.
T	5-23-23	JH	8905	Added all adjustable settings to Programming section. Updated I/O module P/N to kit. Revised Miscellaneous Parts section. Updated to new door with new start switch. Added relay to door interlock. Updated schematic.

Jackson®

Warewashing Systems

DishStar® HT-E

Undercounter dishmachine; high-temperature, hot-water sanitizing, with a booster tank and detergent and rinse-aid chemical feeder pumps.

DishStar® HT-E-SEER

Undercounter dishmachine; high-temperature, hot-water sanitizing, with a booster tank and detergent and rinse-aid chemical feeder pumps. Equipped with Steam Elimination and Energy Recovery System (SEER).

The manufacturer provides technical support for all of the dishmachines detailed in this manual. We strongly recommend that you refer to this manual before making a call to our technical support staff. Please have this manual open when you call so that our staff can refer you, if necessary, to the proper page. Technical support is not available on holidays.

Contact technical support toll free at 1-888-800-5672.

Technical support is available for service personnel only.

TABLE OF CONTENTS

GUIDES

Symbols 1
Abbreviations & Acronyms 1

SPECIFICATIONS

HT-E Dimensions 2
HT-E-SEER Dimensions 3
HT-E Operating Parameters 4
HT-E-SEER Operating Parameters 5
Electrical Requirements 6

INSTRUCTIONS

Installation Instructions 7
Inspection *7*
Unpacking *7*
Plumbing *7*
Water Supply Connections *7*
Pressure Regulator *8*
Shock Absorber *8*
Connecting the Drain Line *8*
Plumbing Check *8*
Electrical Power Connections *9*
Motor Rotation *9*
Voltage Check *10*
Surrounding Area *10*
Temperature Setpoints *10*
Leveling *10*
Chemical Feeder Equipment *10*
Preparing Chemical Feeder Pumps *11*
Priming Chemical Feeder Pumps *11*

Operating Instructions 12
Preparation *12*
Power Up *12*
Filling the Wash Tub *12*
Ware Preparation *13*
Washing a Rack of Ware *13*
Operational Inspection *15*
Shutdown & Cleaning *15*
Deliming *17*
Detergent Control *18*
Energy Saver Mode *18*

TABLE OF CONTENTS

MAINTENANCE

Preventative Maintenance 19

TROUBLESHOOTING

Programming 21
Fault Codes 23
Troubleshooting 26

PARTS

Terminal Block Box, 208/230 V 28
Terminal Block Box, 460 V 29
Kick Panel 30
Control Panel, 208/230 V 31
Control Panel, 460 V 33
Chemical Feeder Pumps 35
Door 36
Miscellaneous Door Components 38
HT-E-SEER Door Interlock 39
Wash 40
Motors 42
Rinse 43
Plumbing Options 44
HT-E Plumbing 45
HT-E-SEER Plumbing 47
Rinse Plumbing 49
Rinse Tank 51
SEER System 53
Stands & Panels 55
Frame 56
Miscellaneous Parts 57

SCHEMATICS

208/230 V, 50/60 Hz, 1 Phase 58
460 V, 60 Hz, 3 Phase 59

SYMBOLS

- Risk of Injury to Personnel

- Risk of Damage to Equipment

- Risk of Electrical Shock

- Caustic Chemicals

- Reference Data Plate

- Lockout Electrical Power

NOTICE - Important Note

- Instructions Hyperlink

ABBREVIATIONS & ACRONYMS

ANSI - American National Standards Institute
GHT - Garden Hose Thread
GPG - Grains per Gallon
GPM - Gallons per Minute
HP - Horse Power
Hz - Hertz
ID - Inside Diameter
kW - Kilowatts
MCA - Minimum Circuit Ampacity
MOP - Maximum Overcurrent Protection
NFPA - National Fire Protection Association
NPT - National Pipe Thread
OD - Outside Diameter
PRV - Pressure Regulating Valve
PSI - Pounds per Square Inch
V - Volts

HT-E DIMENSIONS

LEGEND

A - Electrical Connection

B - Water Inlet (with 6' Hose)
(3/4" Male GHT, connect to true 1/2" ID line, MIN 110 °F)

C - Drain Hose
(5/8" ID, install into 1 1/2" MIN Drain with Air-gap)

D - Chemical Port

All dimensions from the floor can be increased 1" using the machine's adjustable feet.

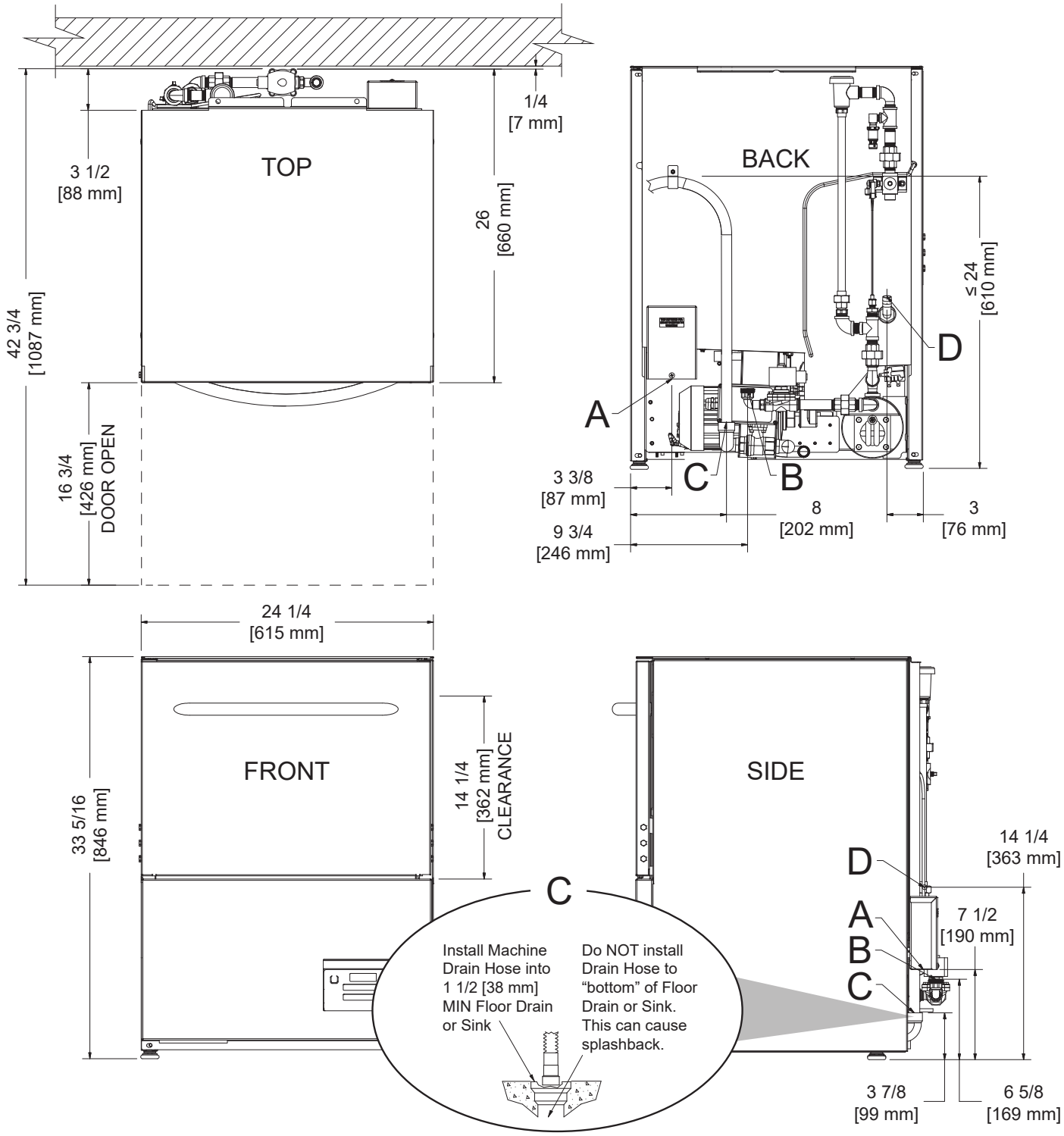

HT-E-SEER DIMENSIONS

LEGEND

A - Electrical Connection

B - Water Inlet (with 6' Hose) (3/4" Male GHT, connect to true 1/2" ID line, 40–90 °F)

C - Drain Hose (5/8" ID, install into 1 1/2" MIN Drain with Air-gap)

D - Chemical Port

All dimensions from the floor can be increased 1” using the machine’s adjustable feet.

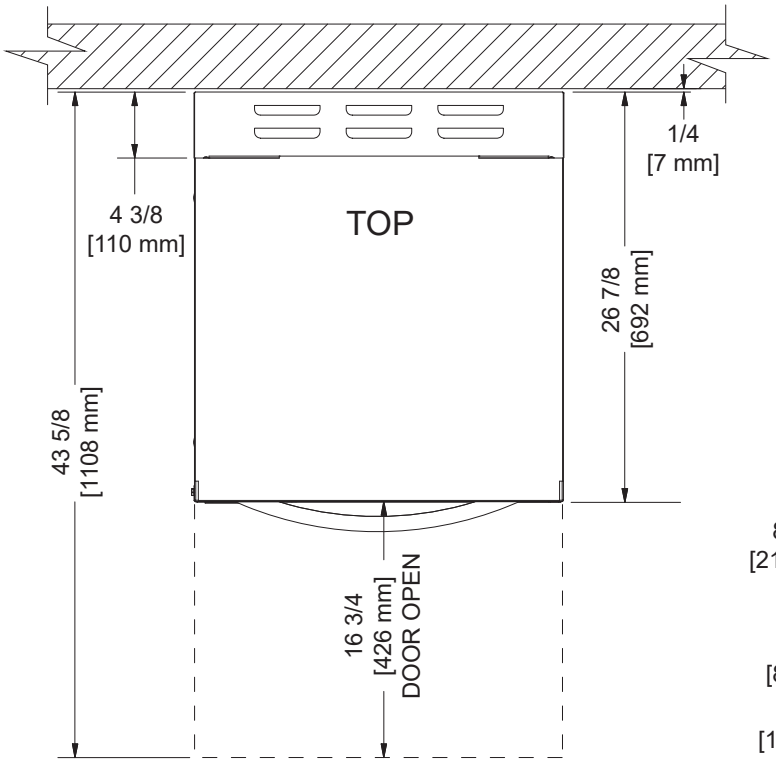

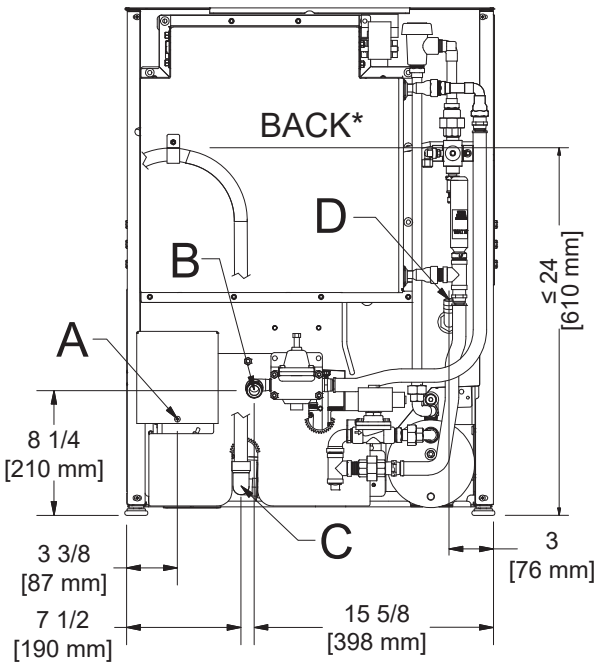

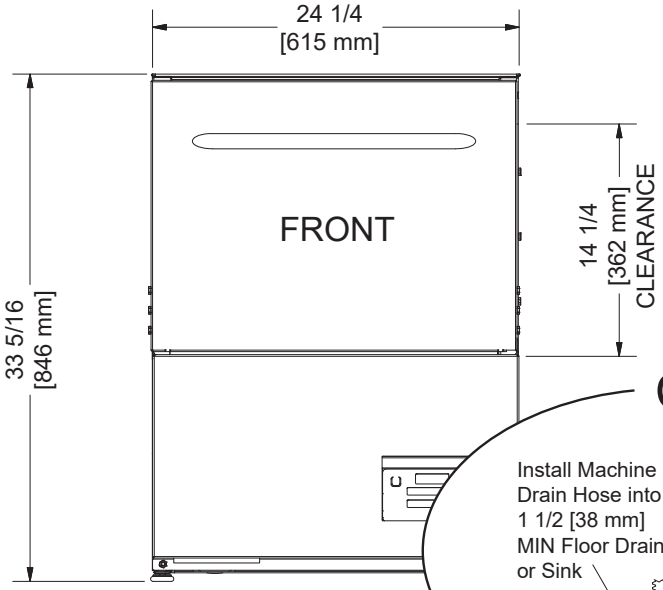

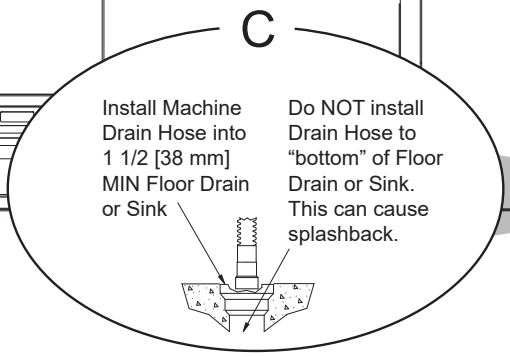

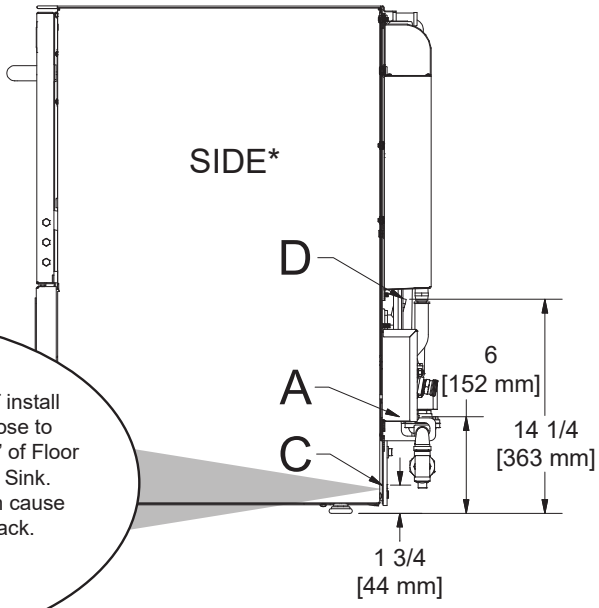

Back and side views shown with back panel removed.

HT-E OPERATING PARAMETERS

DishStar HT-E

Operating Capacity:

Racks per Hour	36 (27)*
Dishes per Hour	900
Glasses per Hour	1296

Tank Capacity (Gallons):

Wash Tank	3
Rinse Tank	1.66

NOTICE *Always refer to machine data plate for specific electrical and water requirements. The material provided on this page is for reference only and is subject to change without notice.*

Cycle Times (Seconds):

Cycle I		Cycle II		Cycle III	
Wash	80	Wash	148	Wash	248
Rinse	9	Rinse	9	Rinse	9
Dwell	11	Dwell	11	Dwell	11
Total	100	Total	168	Total	268

Water Temperatures (°F):

Minimum Wash Temperature	155
Minimum Rinse Temperature	180
Minimum Incoming Water Temperature	110

Incoming water is from a "hot" water line.

Other Water Requirements:

Water Flow Pressure (PSI)	10
Flow Rate Minimum (GPM)	4.33
Water Line Size (NPT)	3/4" Male GHT *Connect to true 1/2" ID Line*
Drain Line Size (NPT)	5/8" ID *Connect to MIN 1 1/2" Drain with Air-gap*
Gallons per Hour (GPH)	21.6 (16.2)**
Gallons per Rack (GPR)	0.60

**Racks per hour calculated with NSF suggested load time of :30 for front-opening dishmachines.*

***Gallons per hour calculated with NSF suggested load time of :30 for front-opening dishmachines.*

HT-E-SEER OPERATING PARAMETERS

DishStar HT-E-SEER

Operating Capacity:

Racks per Hour	24 (20)*
Dishes per Hour	600
Glasses per Hour	864

Tank Capacity (Gallons):

Wash Tank	3
Rinse Tank	1.66

NOTICE *Always refer to machine data plate for specific electrical and water requirements. The material provided on this page is for reference only and is subject to change without notice.*

Cycle Times (Seconds):

Cycle I		Cycle II		Cycle III	
Wash	80	Wash	148	Wash	248
Rinse	9	Rinse	9	Rinse	9
Dwell	11	Dwell	11	Dwell	11
SEER	45	SEER	45	SEER	45
Total	145	Total	213	Total	313

Water Temperatures (°F):

Minimum Wash Temperature	155
Minimum Rinse Temperature	180
Minimum Incoming Water Temperature	40
Maximum Incoming Water Temperature	90

Incoming water is from a "cold" water line.

Other Water Requirements:

Water Flow Pressure (PSI)	10
Flow Rate Minimum (GPM)	4.33
Water Line Size (NPT)	3/4" Male GHT *Connect to true 1/2" ID Line*
Drain Line Size (NPT)	5/8" ID *Connect to MIN 1 1/2" Drain with Air-gap*
Gallons per Hour (GPH)	14.4 (12.0)**
Gallons per Rack (GPR)	0.60

**Racks per hour calculated with NSF suggested load time of :30 for front-opening dishmachines.*

***Gallons per hour calculated with NSF suggested load time of :30 for front-opening dishmachines.*

ELECTRICAL REQUIREMENTS

All electrical ratings provided in this manual are for reference only. Always refer to machine data plate to get exact electrical information for this machine. All electrical work performed on machines should be done in accordance with applicable local, state, territorial, and national codes. Work should only be performed by qualified electricians and authorized service agents.

Amperage loads for motors and heaters are indicated on machine data plate.

The electrical configurations are as follows:

Available Electrical Characteristics:

- 208 V, 60 Hz, Single-phase
- 230 V, 60 Hz, Single-phase
- 460 V, 60 Hz, Three-phase

Available Wash Motors:

- 1 HP

Available Wash Tank Heaters:

- 3.3 kW (208 V)/4.0 kW (230 V)
- 3.7 kW (460 V)

Available Rinse Tank Heaters:

- 4.1 kW (208 V)/5.2 kW (230 V)
- 5.0 kW (460 V)

DishStar HT-E/HT-E-SEER Electrical Characteristics

VOLTS	208	230	460
PHASE	1	1	3
FREQ	60	60	60
WASH MOTOR AMPS	5.0 A	5.0 A	2.0 A
WASH HEATER AMPS	15.7 A	17.4 A	4.6 A
RINSE HEATER AMPS	19.7 A	22.6 A	6.3 A
TOTAL LOAD	24.7 A*	27.6 A*	8.3 A*
MCA	25.9 A	28.8 A	8.8 A
MOP	30 A	30 A	15 A

**The DishStar® HT-E is designed so the heaters never run simultaneously. Total Load is based on the higher of the two loads.*

INSPECTION

Do not throw away packaging if damage is evident!

Before installing machine, check packaging and machine for damage. Damaged packaging might be an indication of damage to machine. If there is any type of damage to both packaging and unit, do not throw away the packaging. The machine has been inspected at the factory before shipping and is expected to arrive in new, undamaged condition. However, rough handling by carriers or others might result in damage to machine while in transit. If this occurs, do not return machine to the manufacturer. Instead, contact the carrier and ask them to send a representative to the site to inspect the damage and request that an inspection report be completed. Contact the carrier and dealer within 48 hours of receiving machine.

UNPACKING

The machine should be unpacked and removed from pallet before installing. Open front door and remove all materials from inside. Once unpacked, verify there are no missing parts. If a part is missing, contact manufacturer immediately.

PLUMBING

Plumber must flush incoming water line!

All plumbing connections must be made to adhere to local, state, territorial, and national codes. The installing plumber is responsible for ensuring the incoming water lines are flushed of debris before connecting to machine. Note that chips and materials from cutting processes can become lodged in the solenoid valves and prevent them from opening or closing. Any valves that are found to be fouled or defective because of foreign matter left in the water line, and any subsequent damage, are not the responsibility of the manufacturer.

See the HT-E Dimensions or HT-E-SEER Dimensions page (depending on your model) and reference item "B" for water inlet connection location.

NOTICE *The manufacturer does NOT endorse "Tankless On-demand" water heaters for use with their dishmachines. The manufacturer DOES endorse, and highly recommends, the standard "Tank" style water heaters, sized to properly handle the water heating requirements of the facility.*

WATER SUPPLY CONNECTIONS: WATER HARDNESS HIGHER THAN 3 GPG

A water hardness test must be performed.

A water hardness test must be performed. If water hardness is higher than 3 GPG and a water softener is not being used, install an SPS (see Plumbing Options page) into the water line between the facility water line and machine water line (installed at the factory). Observe proper inlet/outlet water directions. A water shut-off valve should be installed before installing the SPS to allow access for service. The water supply must be capable of a minimum of 10 PSI "flow" pressure at the recommended temperature indicated on the data plate.

Example

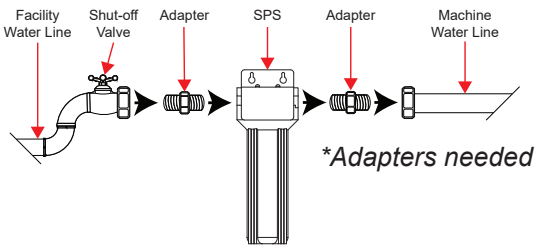

**Adapters needed will vary.*

WATER SUPPLY CONNECTIONS: WATER HARDNESS LOWER THAN 3 GPG

If water hardness tests at 3 GPG or lower, connect machine water line (installed at the factory) to the facility water line. A water shut-off valve should be installed in the water line between the facility supply and machine to allow access for service. The water supply line must be capable of a minimum of 10 PSI "flow" pressure at the recommended temperature indicated on the data plate.

PRESSURE REGULATOR

Take care not to confuse static pressure with flow pressure!

The manufacturer recommends the installation of a pressure regulating valve (PRV) in the incoming water line to ensure proper flowrate at all times and offers them as an option (see the Plumbing Options page). The PRV comes standard on the HT-E-SEER. Do not confuse static pressure with flow pressure. Static pressure is the line pressure in a "no flow" condition (all valves and services are closed). Flow pressure is the pressure in the fill line when the fill valve is opened during the cycle.

SHOCK ABSORBER

The manufacturer also recommends the installation of a shock absorber on the incoming water line and offers them as an option (see the Plumbing Options page). A shock absober comes standard on the HT-E-SEER. This prevents water hammer or hydraulic shock—induced by the solenoid valve as it operates—from causing damage to the equipment.

CONNECTING THE DRAIN LINE

The machine has a pumped (pressure) drain capable of pumping waste water to a height of 24" above the floor to the kitchen's drain system. Each dishmachine is supplied with a drain hose. When installed, it will extend from rear side of machine. There must be an air-gap between machine drain line and floor sink or drain at least 1.5 times larger than drain hose. If a grease trap is required by code, it should have a flow capacity of 12 GPM.

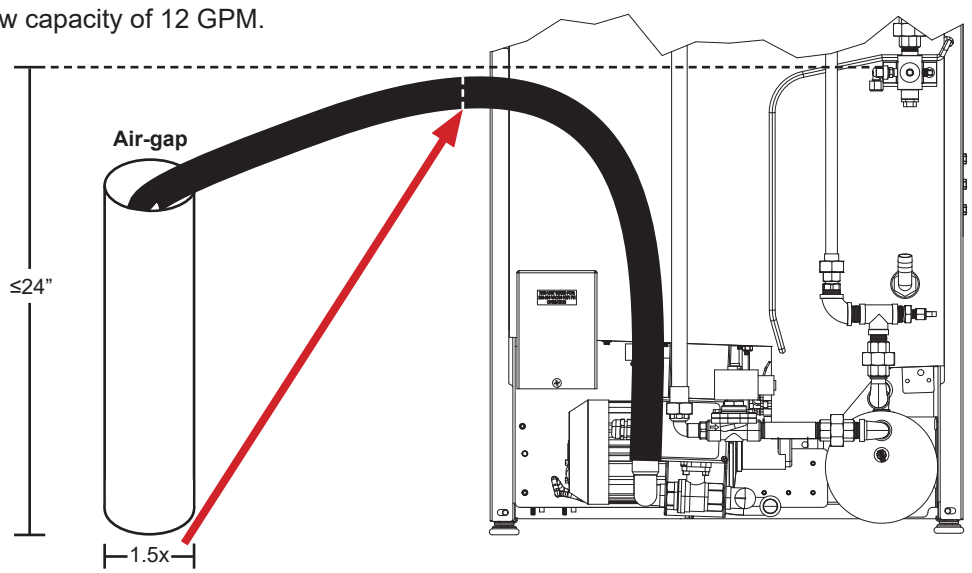

PLUMBING CHECK

After installing the incoming fill line and drain line, turn on the water supply to machine. Check for any leaks and repair as required. All leaks must be repaired before operating machine.

ELECTRICAL POWER CONNECTIONS

Disconnect electrical power at the breaker or disconnect switch and tag-out in accordance with procedures and codes.

On 460 V machine, imbalanced wild leg goes to L3.

Electrical and grounding conductors must comply with the applicable portions of the National Electric Code ANSI/NFPA 70 (latest edition) and/or other electrical codes.

The data plate is located on the left-front of the dishmachine. Refer to the data plate for machine operating requirements, machine voltage, total amperage, and serial number.

Remove the back panel and set aside. Remove the terminal block box cover. Install 3/4" conduit into the hole in the bottom of the terminal block box. Route power wires and connect to terminal block. Install the grounding wire onto the lug provided. "DE-OX" or another similar anti-oxidation agent should be used on all power connections.

208/230 V

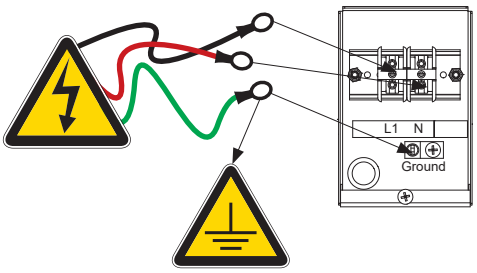

460 V

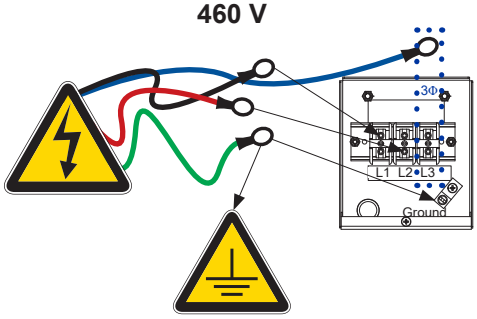

MOTOR ROTATION

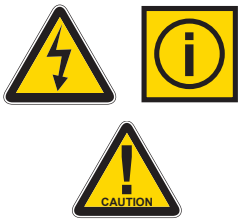

CAUTION! ***On 3-Phase machines only, correct pump motor rotation must be verified before operation!***

On 3-Phase machines only, correct pump motor rotation must be verified before machine is operated. Failure to do so can result in damage to machine and components.

1. Follow Filling the Wash Tub section.
2. Using a 7/16 nutdriver, remove front kick panel and keep hardware. Using a phillips screwdriver, remove right dress panel and keep hardware. Leave start switch wires connected.
3. Locate wash pump motor and identify arrow decal which shows correct motor rotation.

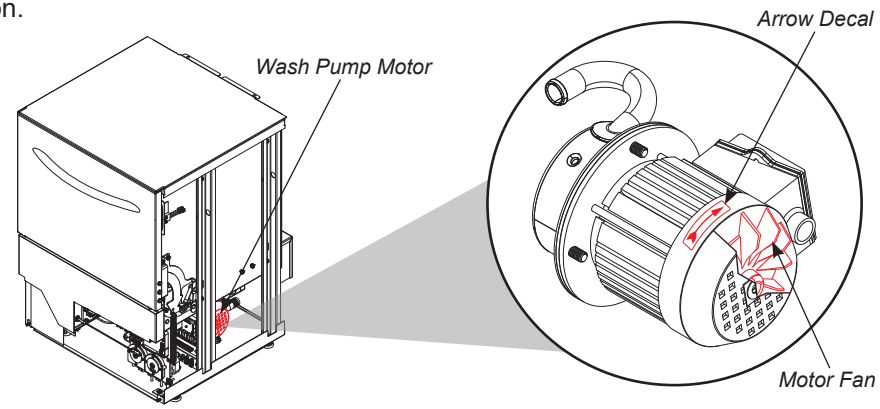

4. Press Start button on right dress panel and immediately open door.
5. This will stop the cycle. Observe rotation of motor fan.
6. If incorrect, disconnect electrical power and reverse L1 and L2 connections at terminal block shown in section above. Replace panels.

VOLTAGE CHECK

Apply power to machine. Check incoming power at the terminal block and ensure it corresponds with voltage listed on the data plate. If not, contact a qualified service agency to examine the problem. Do not run machine if voltage is too high or too low. Advise all proper personnel of the location of the breaker and any problems. Replace the terminal block box cover and tighten-down the screws.

SURROUNDING AREA

This is a commercial machine and reaches temperatures that can exceed those generated by a residential machine. Surrounding countertops, cabinets, flooring material, and subflooring material must be designed and/or selected with these higher temperatures in mind.

CAUTION! *Damage to materials not recommended for higher temperatures will not be covered under warranty or by the manufacturer.*

TEMPERATURE SETPOINTS

Temperature setpoints on this machine have been set at the factory. They should only be adjusted by an authorized service agent.

LEVELING

A level machine is important to prevent any damage to machine during operation and to ensure the best possible results. The machine comes equipped with adjustable bullet feet which can be turned using a pair of pliers. Since this machine is an undercounter unit, it should be leveled as close as possible to the unit's location before it is pushed under the counter.

CHEMICAL FEEDER EQUIPMENT

Bottom of chemical container cannot be located any higher than 8” from the floor. If 6” or 18” table stand is used, highest position would be 14” or 26” from the floor, respectively.

CAUTION! ***Using deionized water or other aggressive fluids will result in corrosion and failure of components and will void the warranty.***

CAUTION! *Chemical tube must not extend past port into wash chamber.*

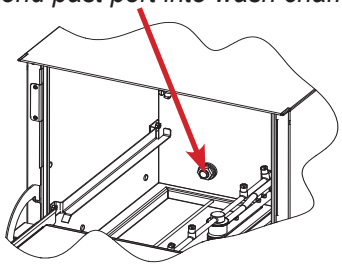

PREPARING CHEMICAL FEEDER PUMPS

This machine is supplied with detergent and rinse-aid chemical feeder pumps.

Locate open ends of chemical tubes with tube stiffeners and place each one in appropriate container.

- Red Tubing = Detergent
- Blue Tubing = Rinse-aid

PRIMING CHEMICAL FEEDER PUMPS

Chemical feeder pumps need priming when machine is first installed or if chemical lines have been removed and air was allowed to enter.

NOTICE

*Machines with serial numbers before 21A390814 prime differently. Click **here** to open manual with old instructions.*

CAUTION! *Water must be in sump and wash tank before dispensing chemicals.*

1. Verify proper chemical tube stiffener inlet is in proper container.
2. To prime detergent pump, press and hold I button until display shows timer. Priming cycle defaults to 70 seconds. Observe wash tank during priming cycle. If too much detergent, press I button to stop priming cycle. If not enough, run priming cycle again.

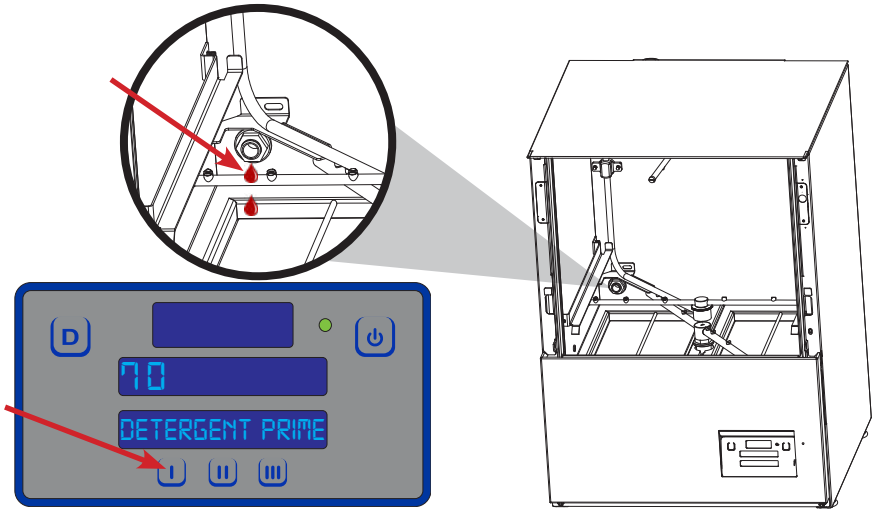

WARNING! ***Some of the chemicals used in dishwashing can cause chemical burns if they come in contact with skin. Wear protective gear when handling these chemicals. If any skin comes in contact with these chemicals, immediately follow the instructions provided with the chemicals for treatment.***

3. To prime rinse-aid pump, press and hold II button until display shows timer. Priming cycle defaults to 180 seconds.

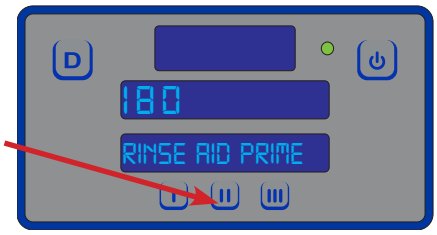

4. Detergent amount might need adjusted depending on water quality and type of detergent. Rinse-aid amount might need adjusted depending on water hardness and results. Refer to next section for instructions on adjusting chemical amounts.

PREPARATION

CAUTION! ***Preparation section must be followed before operating machine!***

1. Verify strainers are in place and clean.

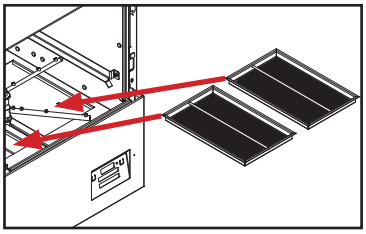

2. Ensure wash and rinse arms are screwed securely in place and end-caps are tight.

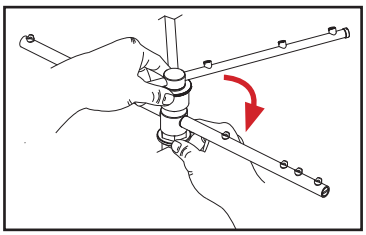

3. Verify wash and rinse arms rotate freely.

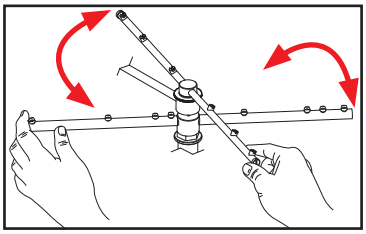

4. Confirm chemical levels are correct.

POWER UP

To energize machine, turn on power at service breaker. The voltage should have been previously verified as correct. If not, voltage must be verified before energizing machine.

FILLING THE WASH TUB

1. Press Power button.

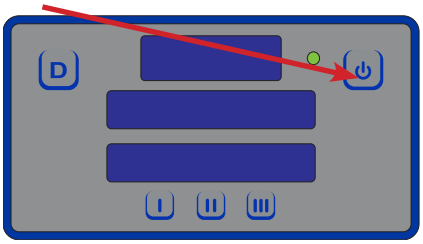

2. Machine will automatically begin fill cycle.
3. Once wash tub is filled, machine displays "HEATING."
4. Wait for wash temperature to display at least 155 °F and for status to display "READY" before operating machine.

WARE PREPARATION

Proper ware preparation helps ensure good results and fewer re-washes. If not done properly, ware might not come out clean and efficiency of the dishmachine will be reduced. Scraps should always be removed from ware before being loaded into a rack. Pre-rinsing and pre-soaking are good ideas, especially for silverware and casserole dishes.

Place cups and glasses upside-down in racks so they don't hold water during the cycle. This machine sanitizes as well as cleans. To do this, ware must be properly prepared before being placed in machine.

WASHING A RACK OF WARE

1. Ensure machine is on, at operating temperature, and status displays "READY."

2. Choose cycle.

Cycle I
100 Seconds
Normally-soiled Ware
Cycle II
168 Seconds
Heavily-soiled Ware
Cycle III
268 Seconds
Extremely-soiled Ware

If Cycle II or III is chosen, machine will stay in that cycle until another is chosen.

3. Open door and load rack.
4. Push Start button.

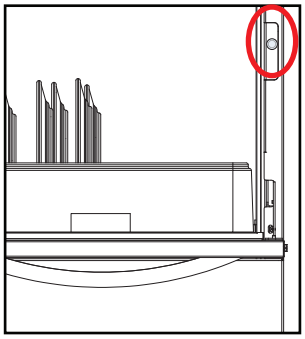

5. LED will turn green. Operator has three seconds to close door before LED goes out and START button must be pressed again.

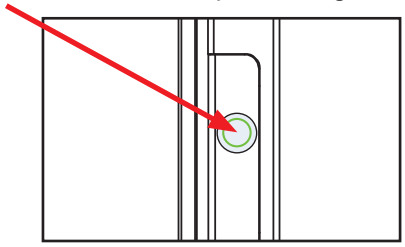

WASHING A RACK OF WARE

Temperature shown is minimum required temperature.

6. Wash cycle automatically starts when door is closed.

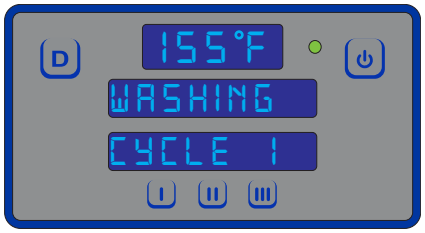

7. After wash cycle is complete, machine will automatically enter rinse cycle.

Temperature shown is minimum required temperature.

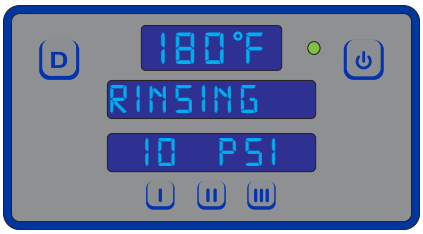

8. Once rinse cycle is complete, machine will automatically enter sanitize cycle.

9. After sanitize cycle is complete, machine will automatically go back to being "READY." Open door and remove rack of ware. To start another cycle, load another rack of ware, push Start button, and close door.

OPERATIONAL INSPECTION

Based on use, strainers might become clogged with soil and debris as the workday progresses. Operators should regularly inspect strainers to ensure they've not become clogged. Clogged strainers will reduce washing capability of machine. Instruct operators to clean out strainers at regular intervals or as required by workload.

SHUTDOWN & CLEANING

1. Close door and turn machine off by pushing Power button.

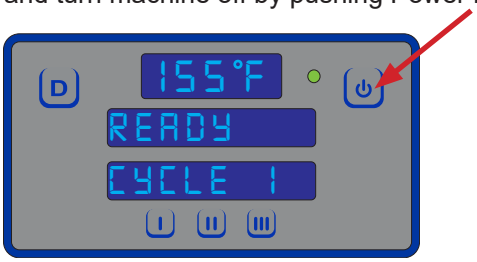

2. Drain valve will activate and empty machine of water.
3. When draining stops and display is off, open door and remove and clean strainers. Set aside.

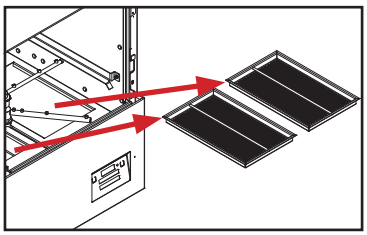

4. Unscrew wash and rinse arms from manifolds.

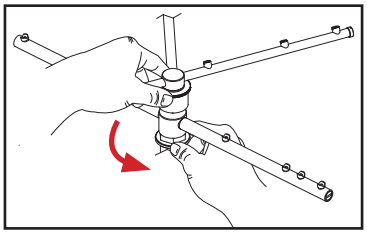

5. Verify nozzles and arms are free from obstruction. If clogged, remove end-caps, clean nozzles with a brush, and flush with fresh water.

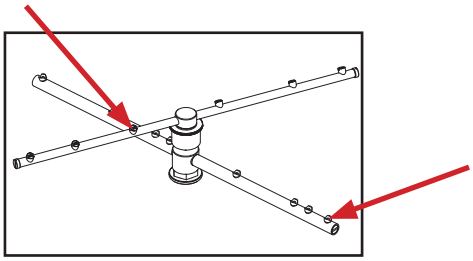

SHUTDOWN & CLEANING

Use a screwdriver to ensure end-caps are tight.

6. Replace end-caps and use a screwdriver to ensure they are tight.

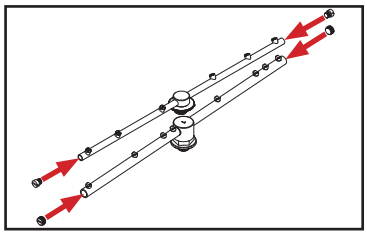

7. Ensure float (located under left strainer) is free of debris.

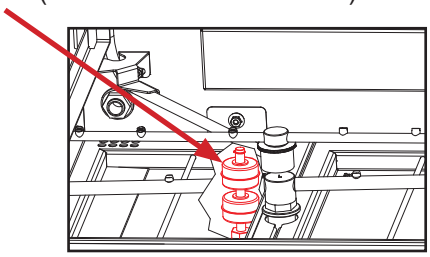

8. Spray or wipe out interior of machine.

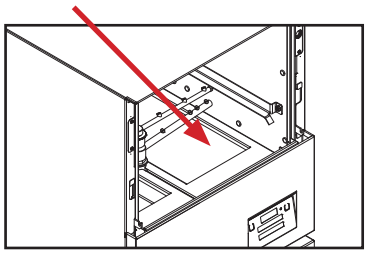

9. Replace wash and rinse arms.

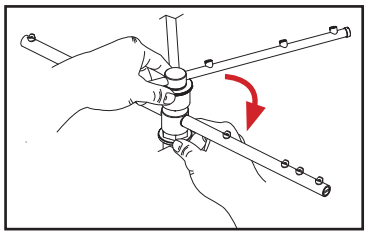

10. Replace strainers and ensure they are laying flat.

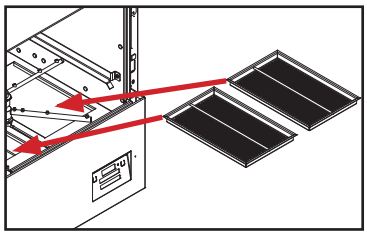

11. Use stainless steel polish to clean and protect outside of machine.

DELIMING

In order to maintain machine at its optimum performance level, lime and corrosion deposits must be removed. The frequency for deliming will be based on water conditions. A deliming solution is available from your chemical supplier. Read and follow all instructions on the label.

If machine is equipped with an SPS and lime is becoming a frequent problem, the cartridge needs to be replaced. To order a replacement cartridge, see the Plumbing Options page.

To delime machine:

1. Remove rinse arms and place in sink with deliming solution (leave for amount of time recommended by chemical supplier).
2. Replace rinse arms.
3. If machine is full of water, close door, press Power button, and allow machine to drain and shut-off.
4. Follow Filling the Wash Tub section of this manual.
5. Press Delime button on display. Status will display "DELIME."

6. Open door and add amount of deliming solution recommended by chemical supplier.
7. Press Start button.

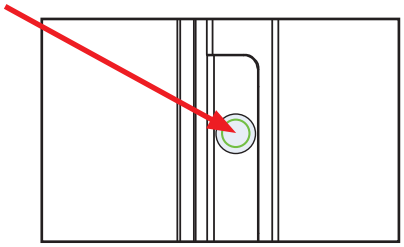

8. Close door within three seconds.
9. Machine will delime, drain, and refill.
10. Wait five minutes, then inspect machine. If machine is not delimed, run again.
11. When clean, press Delime button. Status will display "READY."
12. Run machine through two regular cycles to remove residual deliming solution.
13. Machine is now ready for normal operation.

DETERGENT CONTROL

Detergent usage and water hardness are two factors that greatly contribute to the machine's operating efficiency. Using the proper amount of detergent can become a source of substantial savings. A qualified water-treatment specialist can determine what is needed for maximum efficiency from the detergent.

- Hard water greatly affects performance of the machine, causing the amount of detergent required for washing to increase. If the machine is installed in an area with hard water, the manufacturer recommends the installation of water treatment equipment.
- Deposited solids from hard water can cause spotting that will not be removed with a drying agent. Treated water will reduce this occurence.
- Treated water might not be suitable for use in other areas of operation and it might be necessary to install a water treatment system for the water going to the machine only. Discuss this option with a qualified water treatment specialist.
- Properly train operators on how much detergent is to be used per cycle. Meet with a water treatment specialist and chemical supplier to discuss a complete training program for operators.
- Water temperature is an important factor in ensuring the machine functions properly, and the machine's data plate details what the minimum temperatures must be for the incoming water supply, the wash tank, and the rinse tank. If minimum requirements are not met, it's possible that dishes will not be clean or sanitized.
- Instruct operators to observe the required temperatures and to report when they fall below the minimum allowed. A loss of temperature can indicate a larger problem.

ENERGY SAVER MODE

After no cycle for 30 minutes, Energy Saver Mode initiates and the wash heater thermostat turns off. This conserves energy while the machine is idle. Pushing the start button at any time after Energy Saver Mode is activated turns on the wash heater thermostat, runs a cycle to reheat the wash tank, and resets the timer.

PREVENTATIVE MAINTENANCE

The manufacturer highly recommends that any maintenance and repairs not specifically discussed in this manual only be performed by qualified service personnel. Performing maintenance on the machine may void a warranty.

By following operating and cleaning instructions in this manual, users should get the most efficient results from the machine. As a reminder, here are some steps to ensure the machine is used properly:

1. Ensure water temperatures match those listed on machine data plate (on front-left of machine).

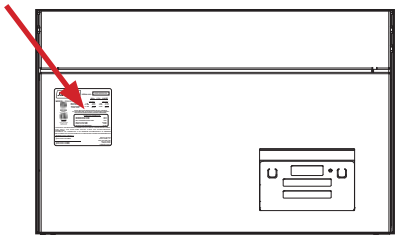

2. Remove as much soil as possible from ware before loading into racks.

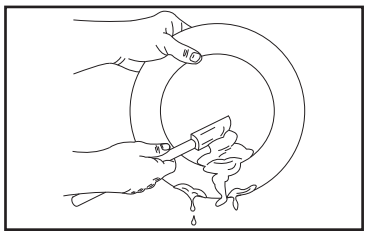

3. Ensure strainers are in place, laying flat in tub, and free of soil and debris before operating machine. To clean strainers, wipe out with a rag and rinse under a faucet. For stubborn debris, a toothpick can be used. Do not beat strainers on waste cans; once bent, they will not work properly.

CAUTION! *Do NOT beat strainers to remove soil and debris!*

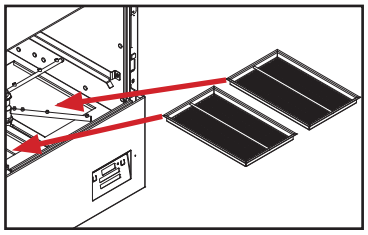

4. Ensure all wash and rinse arms are secure in machine before operating.

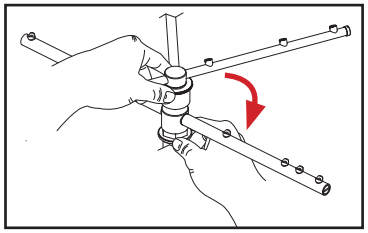

PREVENTATIVE MAINTENANCE

5. Do not overfill racks.

6. Ensure glasses are placed upside-down in the rack.

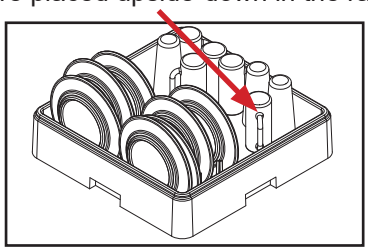

7. Ensure all chemicals being injected into machine have been verified at correct concentrations.

8. Clean machine at end of every workday (see Shutdown and Cleaning section).

9. If hard water is present, install an SPS into water line connecting to machine (see Water Supply Connections section).

10. Always contact a qualified service agency when a serious problem arises.

11. Follow all safety procedures, whether listed in this manual or put forth by local, state, or national codes/regulations.

MODEL CONFIRMATION

To access programming, machine should be on and not in cycle.

Programming buttons (up-arrow, down-arrow, and select) are hidden on display and are shown below as red outlines.

A transparent guide to locating the programming buttons is included with machine, behind the kick panel. Lay the guide over the display and press where indicated.

Factory Setup (Model Selection)

1. Press and hold I and III buttons until “Program” starts flashing (2–3 seconds).

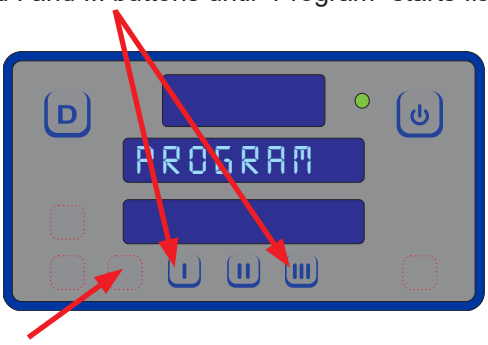

2. Press select button.
3. Use up-arrow or down-arrow button to change program number to correct number in table, based on model.

Pgrm #	Model
6	DishStar HT-E with Serial Number after 23D415452
7	DishStar HT-E-SEER with Serial Number after 23D415452
8	DishStar HT-E with Serial Number before 23D415452
9	DishStar HT-E-SEER with Serial Number before 23D415452

4. Press select button.
5. “Program” will flash.
6. Press delime button to exit.

CAUTION! ***Machine will not operate properly with wrong program number!***

USER SETUP

A transparent guide to locating the programming buttons is included with machine, behind the kick panel. Lay the guide over the display and press where indicated.

To access programming mode, machine should be on and not in cycle.

Programming buttons (Up-arrow, Down-arrow, and Select) are hidden on display and are shown below outlined with red dots.

1. Press and hold Up-arrow and Down-arrow buttons until “Setup” flashes (2–3 seconds).

2. Display will then change to “Version” and show firmware versions of the I/O module and display.
3. Use Up-arrow button to cycle through adjustable settings (will be flashing).

4. Press Select button to choose setting to change.
   - Regardless of category, Steps 5–7 remain the same.
5. Use Up-arrow button to change options (will be flashing). Numerical options are shown in top window.

6. Press Select button to accept changes.
7. Press Delime button to exit.

ADJUSTABLE SETTINGS
Language
Temperature Scale
Wash Temperature
Boost Temperature
Wash Offset
Rinse Offset
Boost Offset
Spare Offset
Detergent Dispense Time
Rinse-aid Dispense Time
Detergent Priming Time
Rinse-aid Priming Time
Saver Wash Temp
Saver Activation Delay

DISPLAY SHOWS	POSSIBLE CAUSES	REMEDY
“F1 Service needed,” “No water in Booster”	1. Low or no water pressure. 2. Faulty inlet valve or fill relay. 3. Contactor to booster heater not turning off. 4. Faulty temperature input (P12) on IO module. 5. Faulty temperature probe (T3). 6. Faulty float switch allows heaters to operate with no water in tub.	1. Verify incoming water pressure is 10 ± 2 PSI. 2. Verify that fill relay is supplying voltage to fill solenoid. Replace faulty component. 3. Check for welded contacts. Verify that output from IO module turns off when above the set temperature. 4. Substitute a 1.2 kΩ resistor for T3, and verify that booster heater turns off. If not, replace IO module. 5. Verify that the booster-probe resistance is correct with respect to temperature (see table on pg. 24). If not, replace T3. 6. Replace float switch.
“F2 Service needed,” “Check booster thermostat”	1. Contactor to booster heater not turning off. 2. Faulty temperature input (P12) on IO module. 3. Faulty temperature probe (T3).	1. Check for welded contacts. Verify that output from IO module turns off when above the set temperature. 2. Substitute a 1.2 kΩ resistor for T3, and verify that booster heater turns off. If not, replace IO module. 3. Verify that the booster probe resistance is correct with respect to temperature (see table on pg. 24). If not, replace T3.
“F3 No water in wash tank,” “Check inlet water and door”	1. Malfunction of fill solenoid or fill relay. 2. Door is open, which inhibits fill mode. 3. Faulty door switch.	1. Replace faulty component. 2. Close door to activate door switch. 3. Replace or adjust door switch.
"F4 Service needed," "Check incoming power"	1. Incoming power not properly connected. 2. L3 is missing (3-phase machines only).	1. Check connections to heater. 2. Verify that L3 is present and connected properly.
“F5 Service needed,” “Check booster thermostat and high limit”	1. Faulty temperature input (P12) on IO module. 2. Faulty temperature probe (T3). 3. Faulty high-limit switch. 4. Faulty booster heater. 5. Booster-heater contactor not energizing.	1. Substitute a 1.8 kΩ resistor for T3, and verify that booster heater turns on. If not, replace IO module. 2. Verify that T3 resistance is consistent with the table on pg. 24. If not, replace T3. 3. Replace high-limit switch. 4. Check booster heater for proper resistance. Replace if incorrect. 5. Verify that drive voltage to contactor coil is present during a call for heat and that contactor closes. If voltage is present, replace contactor. If voltage is not present, check wiring.

DISPLAY SHOWS	POSSIBLE CAUSES	REMEDY
"F6 Service needed," "No water in wash tank"	1. Low or no water pressure. 2. Faulty inlet valve or fill relay. 3. Contactor to wash heater not turning off. 4. Faulty temperature input (T1) on IO module. 5. Faulty temperature probe (T1). 6. Faulty float switch allows heaters to operate with no water in tub.	1. Verify incoming water pressure is 10 ± 2 PSI. 2. Verify that fill relay is supplying voltage to fill solenoid. Replace faulty component. 3. Check for welded contacts. Verify that output from IO module turns off when above the set temperature. 4. Substitute a 1.2 kΩ resistor for T1, and verify that wash heater turns off. If not, replace IO module. 5. Verify that T1 resistance is correct with respect to temperature (see table on pg. 24). If not, replace T1. 6. Replace float switch.
"F7 Service needed," "Check wash tank thermostat"	1. Contactor to wash heater not turning off. 2. Faulty temperature input (P10) on IO module. 3. Faulty temperature probe (T1).	1. Check for welded contacts. Verify that output from IO module turns off when above the set temperature. 2. Substitute a 1.2 kΩ resistor for T1, and verify that wash heater turns off. If not, replace IO module. 3. Verify that T1 resistance is correct with respect to temperature (see table on pg. 24). If not, replace T1.
"F8 No water in wash tank," "Check inlet water and door"	1. Malfunction of fill solenoid or fill relay. 2. Door is open, which inhibits fill mode. 3. Faulty door switch.	1. Replace faulty solenoid or fill relay. 2. Close door to activate door switch. 3. Replace or adjust door switch.
"F9 Service needed," "Check incoming power"	1. Incoming power not properly connected. 2. L3 is missing (3-phase machines only).	1. Check connections to heater. 2. Verify that L3 is present and connected properly.
"F10 Service needed," "Check wash tank thermostat and high limit"	1. Faulty temperature input (T1) on I/O module. 2. Faulty temperature probe (T1). 3. Faulty high-limit switch. 4. Faulty wash heater. 5. Wash-heater contactor not energizing.	1. Substitute a 1.8 kΩ resistor for T1, and verify that wash heater turns on. If not, replace I/O module. 2. Verify that T1 resistance is correct with respect to temperature (see table on pg. 24). If not, replace T1. 3. Replace high-limit switch. 4. Check wash heater for proper resistance. Replace if incorrect. 5. Verify that drive voltage to contactor coil is present during a call for heat and that contactor closes. If voltage present, replace contactor. If voltage not present, check wiring.
"F11 Service needed," "Check wash tank thermostat"	Faulty temperature probe (T1).	Replace probe that connects to P10.

DISPLAY SHOWS	POSSIBLE CAUSES	REMEDY
"F12 Service needed," "Check booster thermostat"	Faulty temperature probe (T3).	Replace probe that connects to P13.
"F13 Communication error," "Check 6-pin cable"	1. Loose connection in 6-pin cable between display board and I/O module. 2. Faulty 6-pin cable between display board and I/O module. 3. Faulty communication port on I/O module or display board.	1. Fully disconnect 6-pin cable at each end, and reconnect each end until a click is heard. 2. Inspect for broken wire or unseated terminal by gently pulling on each wire at each end of the cable. Reseat any loose terminals by inserting it fully into the housing using long-nosed pliers. Replace cable if broken wire is found. 3. Temporarily substitute a verified good display board, and check if F13 message recurs. If so, repeat substitution with a good I/O module.
"F14 Service needed," "Check incoming water pressure or pressure switch"	1. Low or no water pressure. 2. Faulty pressure switch. 3. Faulty fill valve or fill valve not receiving power.	1. Verify correct PSI. 2. Replace pressure switch. 3. Check continuity and replace if faulty.
"F16 LLC violation"	Faulty or corroded probe.	Clean or replace probe.
"F17 Excessive inlet temp"	Inlet water supply too hot.	Ensure inlet water supply is at required temperature.

RESISTANCE-TO-TEMPERATURE VALUES

R (kΩ)	°F
11.58	69.8
10.37	75.2
9.30	80.6
7.78	89.6
3.05	140.0
2.54	150.8
2.18	159.8
1.58	179.6
1.45	185.0
1.33	190.4
1.16	199.4
0.96	212.0

TROUBLESHOOTING

WARNING! *Inspection, testing, and repair of electrical equipment should only be performed by qualified service personnel. Certain procedures in this section require electrical tests or measurements while power is applied to machine. Exercise extreme caution at all times. If test points are not easily accessible, disconnect power, attach test equipment, and reapply power to test. When replacing electrical parts, disconnect power at circuit breaker.*

OBSERVATION	POSSIBLE CAUSE	REMEDY
Water overflow from bottom of door.	1. Clogged drain. 2. Machine not level. 3. Excessive inlet pressure. 4. Detergent foaming. 5. Wash or rinse arm end-cap missing.	1. Remove obstruction. 2. Level machine or increase height to the front. 3. Install pressure regulating valve or adjust if one is present. Ensure flow meets data plate specification. 4. Reduce detergent quantity. 5. Replace.
Wash motor doesn't operate on wash.	1. Loose or broken wires. 2. Defective Start button. 3. Defective motor contactor.	1. Reconnect or replace wires in motor. 2. Adjust button or replace. 3. Replace.
Little or no water coming through the rinse assemblies.	1. Limed-up rinse heads or piping. 2. Low water pressure.	1. Delime rinse heads. 2. Increase pipe size to machine. Adjust pressure regulating valve.

TROUBLESHOOTING

WARNING! *Inspection, testing, and repair of electrical equipment should only be performed by qualified service personnel. Certain procedures in this section require electrical tests or measurements while power is applied to machine. Exercise extreme caution at all times. If test points are not easily accessible, disconnect power, attach test equipment, and reapply power to test. When replacing electrical parts, disconnect power at circuit breaker.*

OBSERVATION	POSSIBLE CAUSE	REMEDY
Rinse water runs continuously with breaker turned off.	1. Defective plunger in solenoid valve. 2. Defective diaphragm in solenoid valve.	1. Replace plunger. 2. Replace diaphragm.
Wash temperature not within range.	1. Water level low. 2. RTD setpoint too low. 3. Defective RTD. 4. Wash heater defective. 5. Defective heater contactor R1.	1. Check water level. If low, run new fill cycle. 2. Adjust setpoint. 3. Replace RTD. 4. Replace heater element. 5. Replace contactor.
Rinse temperature not within range.	1. RTD is defective. 2. Incoming rinse water does not meet minimum criteria indicated machine data plate. 3. Rinse heaters damaged. 4. Setpoint screens set low.	1. Replace if necessary. 2. Adjust as required. 3. Check amperages. Replace if necessary. 4. Adjust rinse tank setpoint.
Machine doesn't drain when power button is pressed.	1. Drain clogged. 2. Defective drain valve.	1. Remove obstruction. 2. Replace.
Incorrect water pressure displayed during Fill or Rinse.	1. Water turned off. 2. Transducer disconnected. 3. Pressure transducer defective.	1. Turn water on. 2. Verify wiring. 3. Replace pressure transducer.

TERMINAL BLOCK BOX, 208/230 V

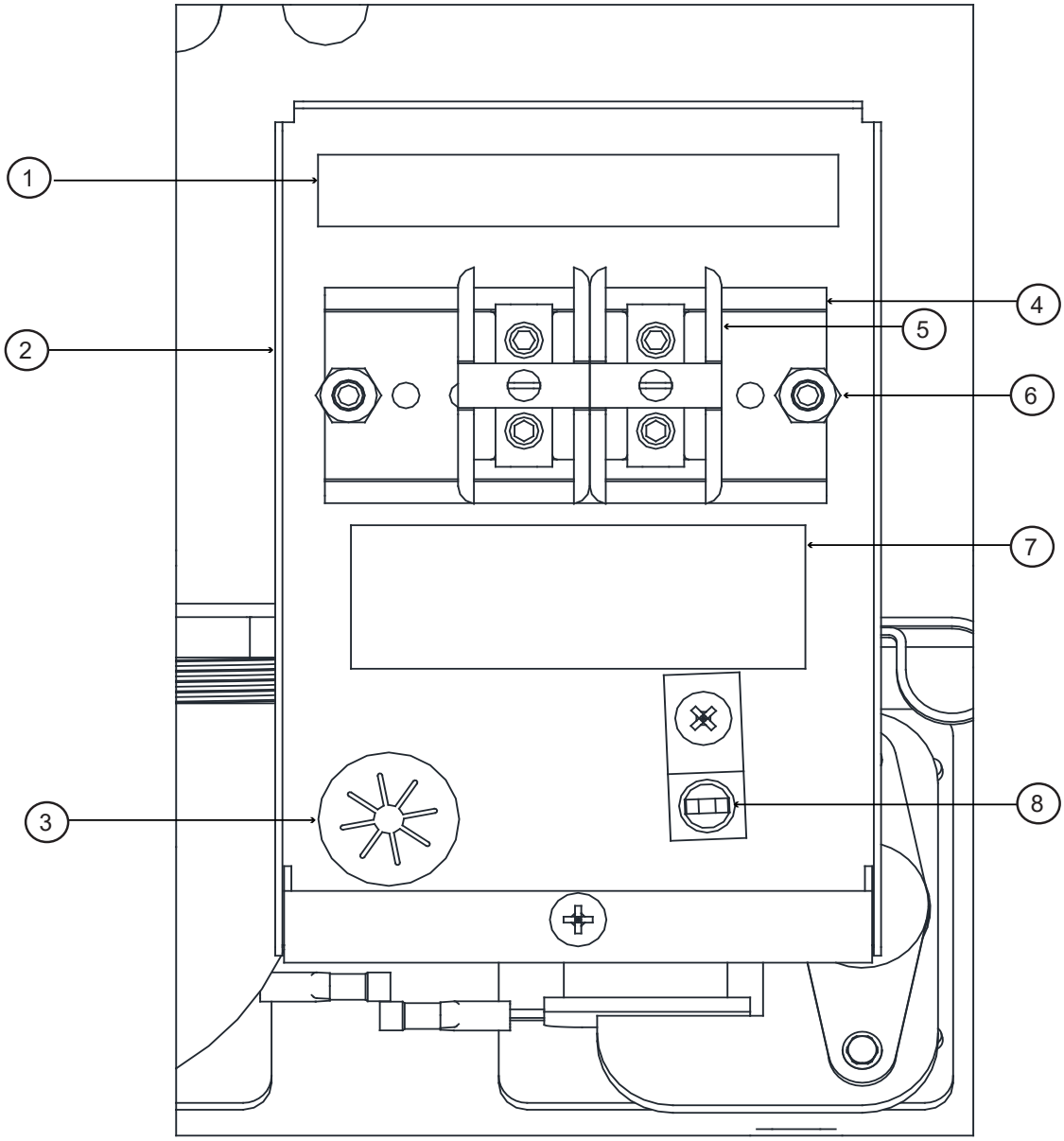

ITEM	QTY	DESCRIPTION	PART NUMBER
1	1	Power Connection Decal	09905-011-47-35
2	1	Terminal Block Box	05700-004-36-47
	1	Terminal Box Cover (Not Shown)	05700-003-27-70
3	1	Strain Relief	05975-003-37-56
4	1	Terminal Block Track	05700-000-43-60
5	2	Terminal Block	05940-500-02-19
6	2	Locknut, 10-24 Hex with Nylon Insert	05310-373-01-00
7	1	Decal, L1, N	09905-011-62-72
8	1	Ground Lug	05940-200-76-00

TERMINAL BLOCK BOX, 460 V

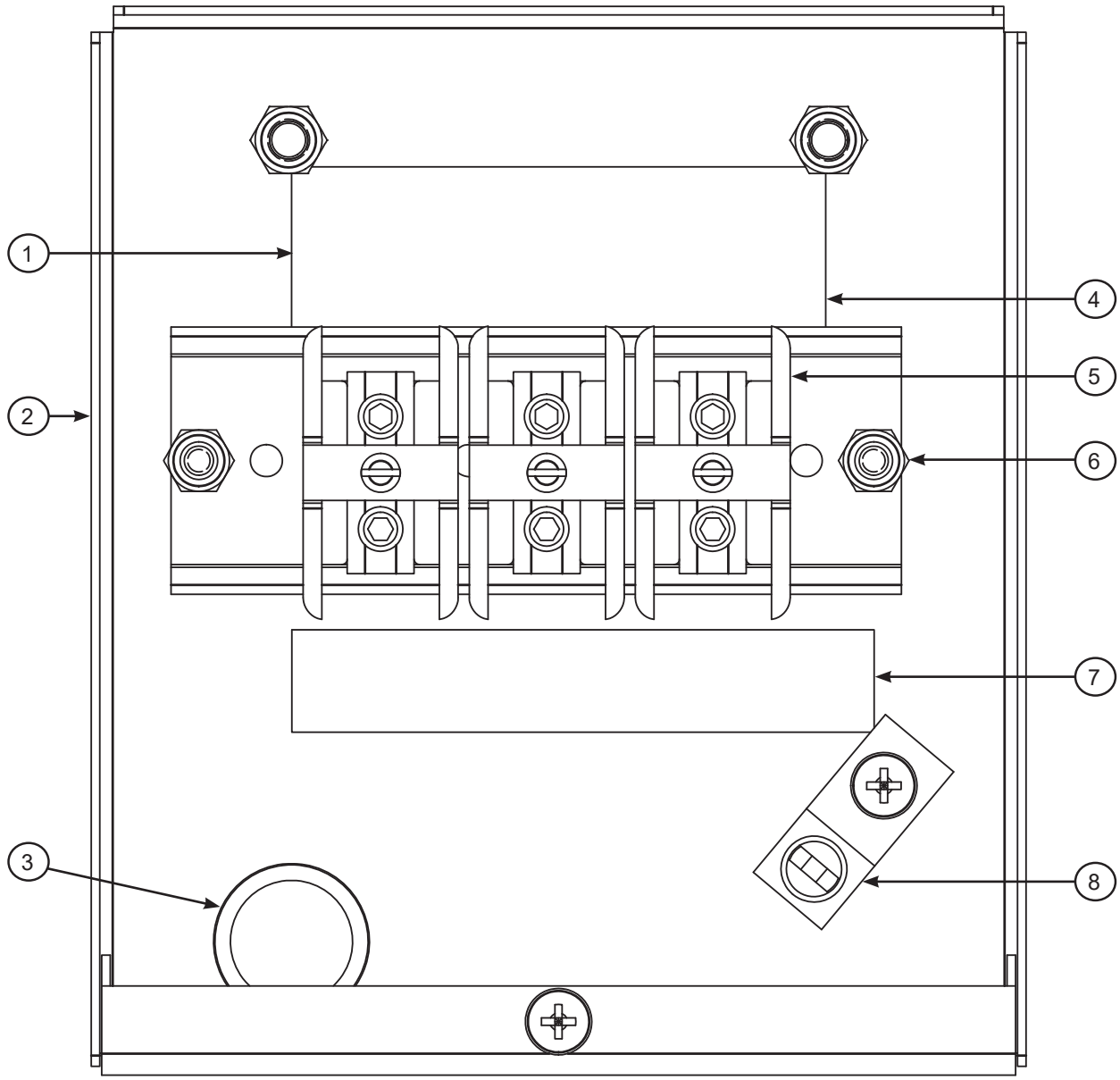

ITEM	QTY	DESCRIPTION	PART NUMBER
1	1	Power Connection Decal	09905-011-47-35
2	1	Terminal Block Box	05700-004-44-79
	1	Terminal Box Cover (Not Shown)	05700-004-44-80
3	1	Strain Relief	05975-210-03-00
4	1	Terminal Block Track	05700-004-44-72
5	3	Terminal Block	05940-500-02-19
6	2	Locknut, 8-32 Low Profile	05310-004-23-83
7	1	Decal, L1, L2, L3	09905-101-12-66
8	1	Ground Lug	05940-200-76-00

KICK PANEL

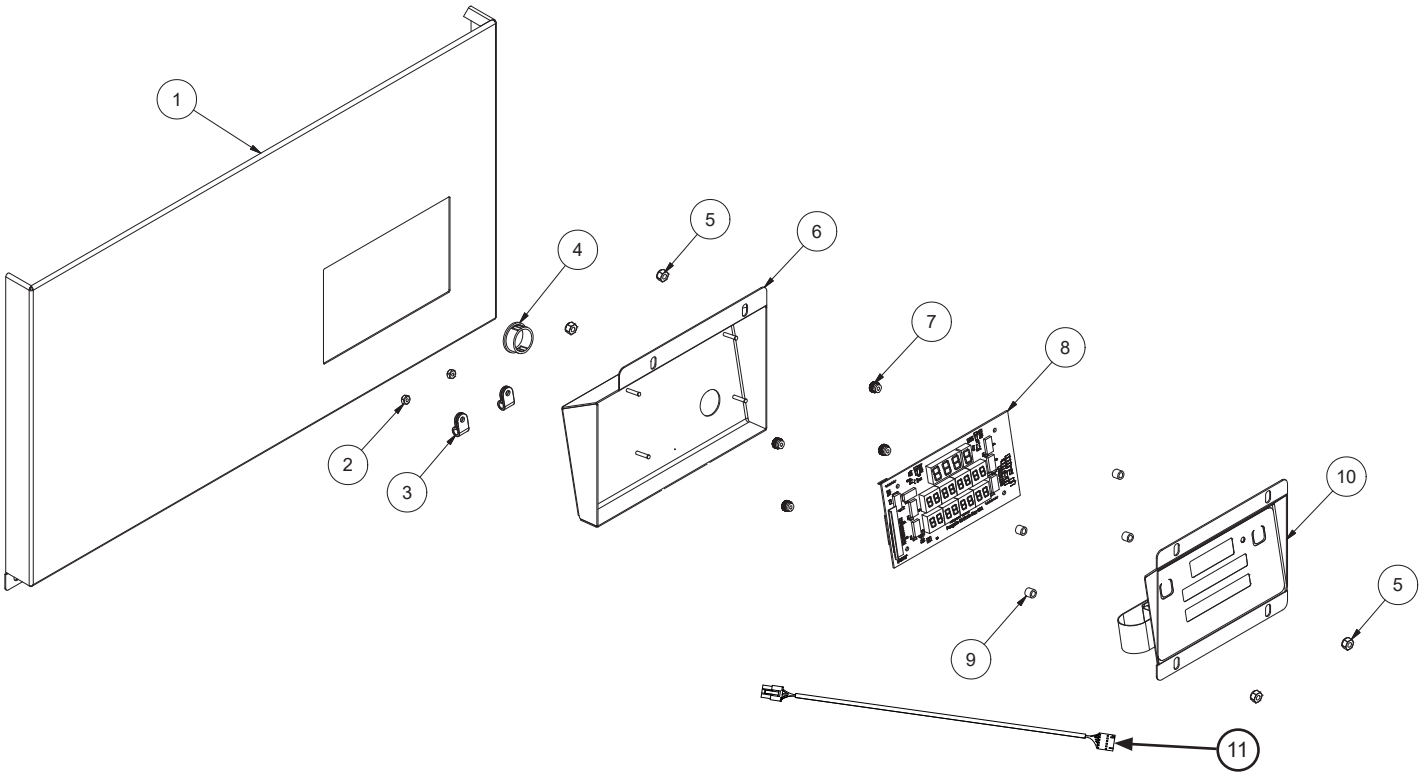

ITEM	QTY	DESCRIPTION	PART NUMBER
		Complete Kick Panel Assembly	05700-004-41-87
1	1	Kick Panel	05700-004-41-86
2	2	Locknut, 6-32 Hex with Nylon Insert	05310-373-03-00
3	2	P-clamp, 1/4" ID	05975-002-61-42
4	1	Bushing, Snap	05975-210-09-00
5	4	Locknut, 10-24 Hex with Nylon Insert	05310-373-01-00
6	1	Cover, Display	05700-004-46-05
7	4	Nut, Thumb 6-32 Nylon	05310-002-83-12
8	1	PCB, Digital Display	05700-004-19-47
9	4	Spacer, Unthreaded, 9/32" Nylon	05975-004-47-89
10	1	Panel & Membrane Switch Assembly	05700-004-58-72
11	1	Communication Cable	05700-004-33-64

CONTROL PANEL, 208/230 V

NOTICE

*208-230 V machines with serial numbers before 22E406186 have a universal timer. Click **here** to open earlier manual.*

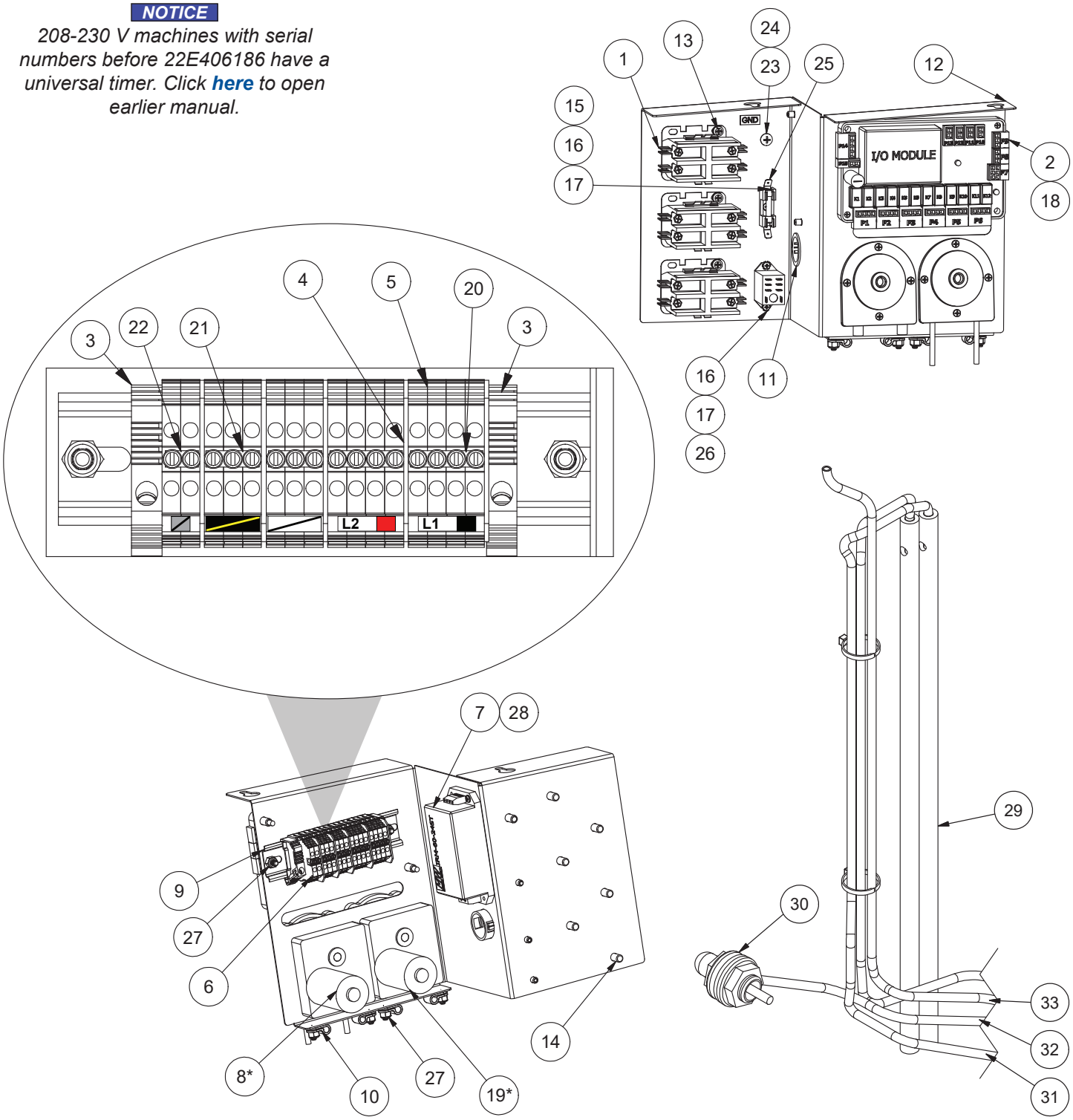

CONTROL PANEL, 208/230 V

ITEM	QTY	DESCRIPTION	PART NUMBER
1	3	Contactor, 30 A, 240 VAC	05945-002-74-20
2	1	I/O Module	06401-005-05-85
3	2	End Bracket, Terminal	05999-004-90-66
4	5	Separator, Terminal Block	05999-004-90-67
5	16	Terminal Block, Single Level	05999-004-90-68
6	16	Tag, Marking	05999-004-90-72
7	1	Power Supply	05950-004-81-79
8*	1	Peri-pump Assembly	05700-004-71-63
9	1	Din Rail, 5 3/4"	05700-021-72-75
10	4	P-clamp, 1/4" ID	05975-002-61-42
11	1	Bushing, 1 1/8"	05975-210-08-00
12	1	Bracket, Control Panel	05700-004-96-19
13	6	Screw, 10-32 x 1/2"	05305-002-80-88
14	9	Fastener, 10-32	05340-111-58-10
15	1	Fuse, Time-delay 8 A, 250 V	05920-004-85-54
16	5	Nut, Plated 6-32	05340-118-04-00
17	3	Screw, 6-32 x 3/8"	05305-002-25-91
18	2	Screw, 10-32 x 1"	05305-002-19-42
19*	1	Peri-pump Assembly	05700-005-00-29
20	2	Jumper Bars, 4-Pole	05999-004-41-80
21	2	Jumper Bars, 3-Pole	05999-004-90-71
22	1	Jumper Bars, 2-Pole	05999-004-41-79
23	1	Screw, 10-32 x 1/2"	05305-011-39-36
24	1	Decal, Ground	09905-011-86-86
25	1	Fuser Holder, One Only	05920-002-42-13
26	1	Relay, 10 A, 240 VAC	05945-111-89-75
27	6	Locknut, 10-24 Hex with Nylon Insert	05310-373-01-00
28	2	Screw, 6-32 x 1/2"	05305-004-23-63
29	2	Stiffener, Chemical Tube	05700-002-66-49
30	1	Chemical Port Assembly	05700-004-30-86
31	1	Tubing, Blue, 1/4"	04720-604-11-00
32	1	Tubing, Red, 1/4"	04720-601-12-00
33	1	Tubing, Clear, 1/8"	04720-111-58-09

**See Chemical Feeder Pumps section for peri-pump components.*

CONTROL PANEL, 460 V

NOTICE

*208-230 V machines with serial numbers before 22E406186 have a universal timer. Click **here** to open earlier manual.*

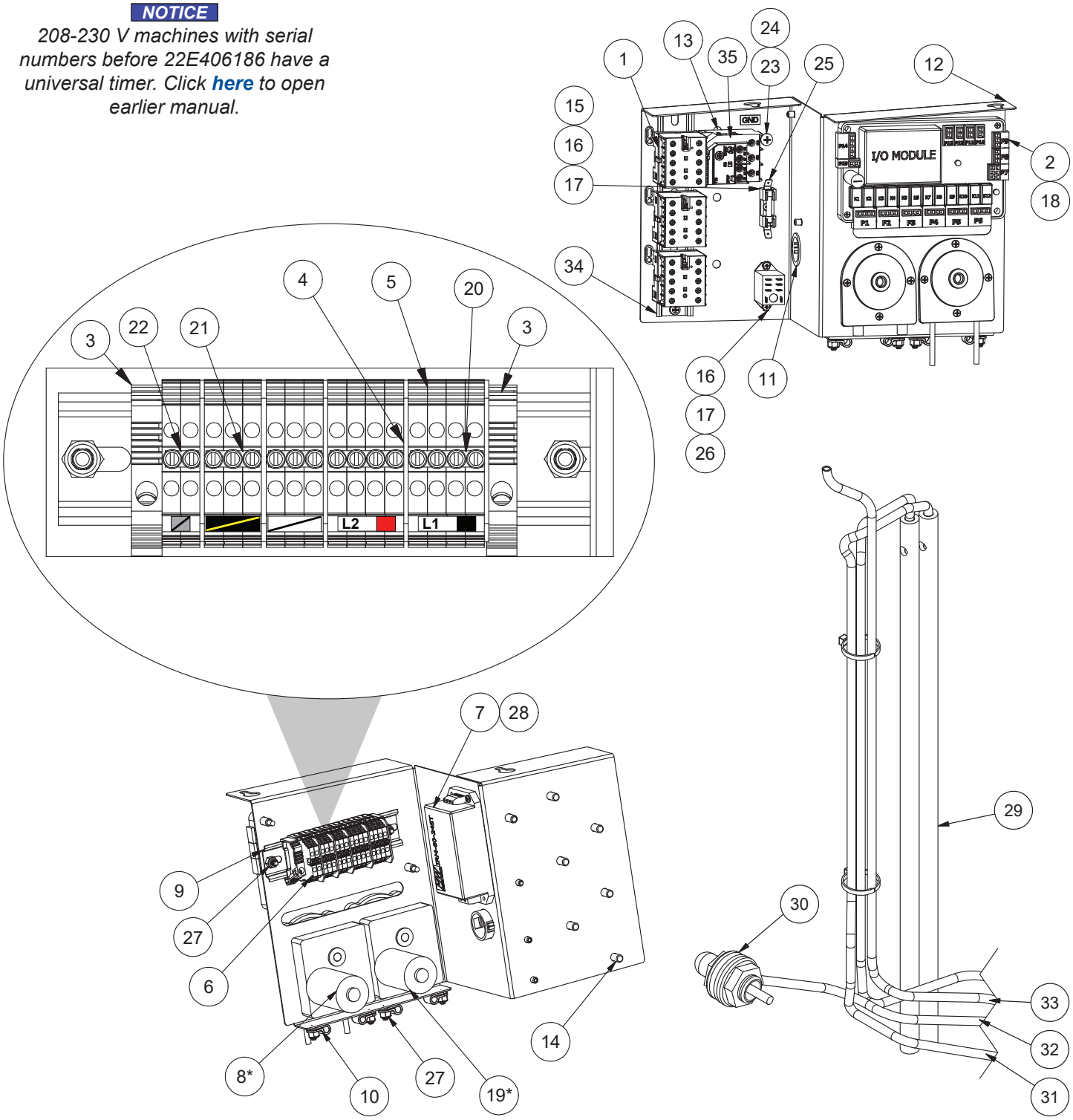

CONTROL PANEL, 460 V

ITEM	QTY	DESCRIPTION	PART NUMBER
1	3	Contactor, 240 VAC	05945-005-05-99
2	1	I/O Module	06401-005-05-85
3	2	End Bracket, Terminal	05999-004-90-66
4	5	Separator, Terminal Block	05999-004-90-67
5	16	Terminal Block, Single Level	05999-004-90-68
6	16	Tag, Marking	05999-004-90-72
7	1	Power Supply	05950-004-81-79
8*	1	Peri-pump Assembly	05700-004-71-63
9	1	Din Rail, 5 3/4"	05700-021-72-75
10	4	P-clamp, 1/4" ID	05975-002-61-42
11	1	Bushing, 1 1/8"	05975-210-08-00
12	1	Bracket, Control Panel	05700-004-96-19
13	6	Screw, 10-32 x 1/2"	05305-002-80-88
14	9	Fastener, 10-32	05340-111-58-10
15	1	Fuse, Time-delay 8 A, 250 V	05920-004-85-54
16	5	Nut, Plated 6-32	05340-118-04-00
17	3	Screw, 6-32 x 3/8"	05305-002-25-91
18	2	Screw, 10-32 x 1"	05305-002-19-42
19*	1	Peri-pump Assembly	05700-005-00-29
20	2	Jumper Bars, 4-Pole	05999-004-41-80
21	2	Jumper Bars, 3-Pole	05999-004-90-71
22	1	Jumper Bars, 2-Pole	05999-004-41-79
23	1	Screw, 10-32 x 1/2"	05305-011-39-36
24	1	Decal, Ground	09905-011-86-86
25	1	Fuser Holder, One Only	05920-002-42-13
26	1	Relay, 10 A, 240 VAC	05945-111-89-75
27	6	Locknut, 10-24 Hex with Nylon Insert	05310-373-01-00
28	2	Screw, 6-32 x 1/2"	05305-004-23-63
29	2	Stiffener, Chemical Tube	05700-002-66-49
30	1	Chemical Port Assembly	05700-004-30-86
31	1	Tubing, Blue, 1/4"	04720-604-11-00
32	1	Tubing, Red, 1/4"	04720-601-12-00
33	1	Tubing, Clear, 1/8"	04720-111-58-09
34	1	Dinrail, 7 3/4"	05700-002-79-13
35	1	Overload Relay, 1.7–2.3 A	05945-004-97-95

**See next section for peri-pump components.*

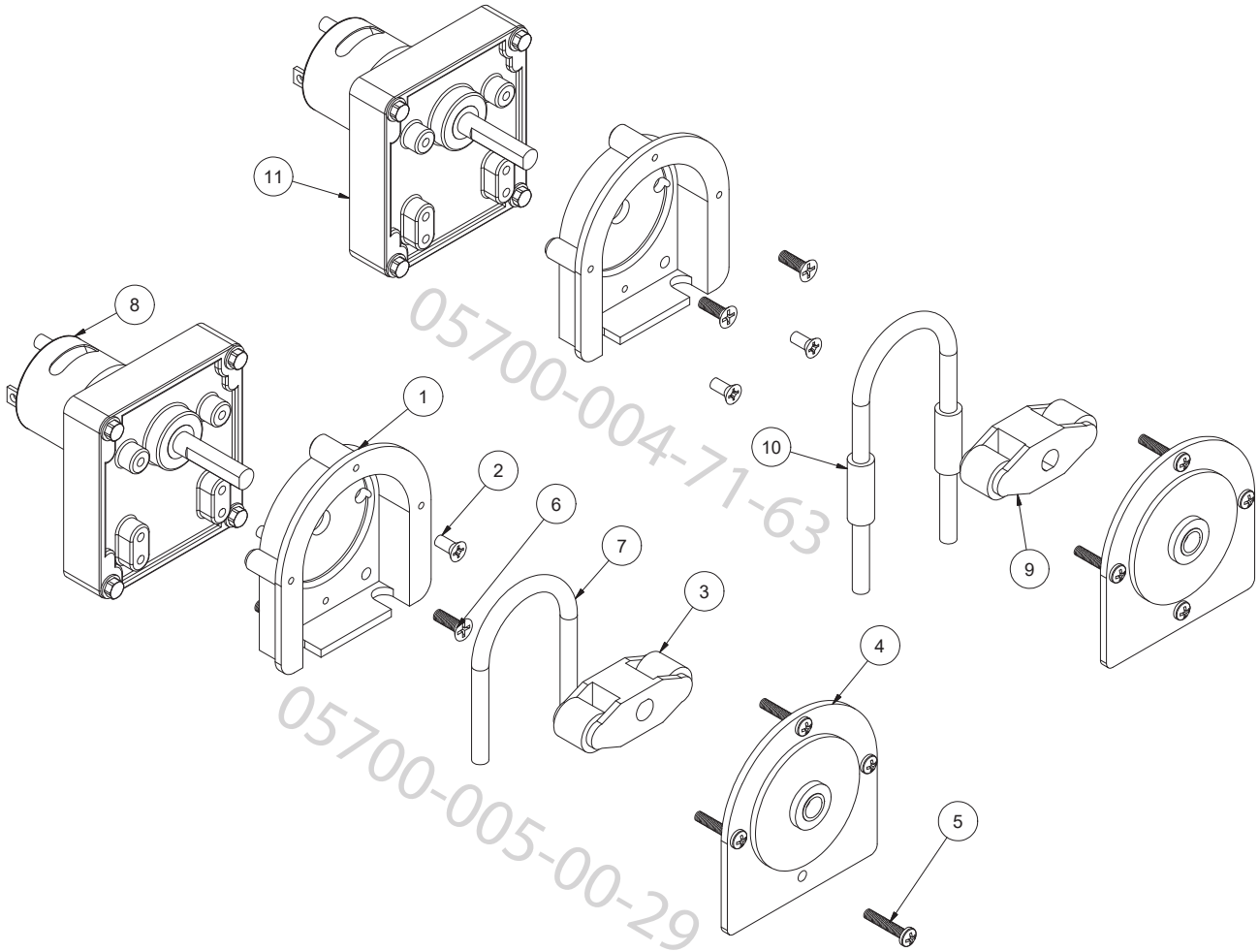

ITEM	QTY	DESCRIPTION	PART NUMBER
1	2	Pump Housing	04320-111-37-09
2	4	Screw, 8-32 x 3/8" Phillips	05305-011-37-07
3	1	Roller, Plastic	04320-002-82-28
4	2	Pump Cover	04320-111-37-08
5	8	Screw, 6-32 x 3/4" Phillips	05305-011-37-05
6	4	Screw, 8-32 x 1/2" Phillips	05305-011-37-06
7	1	Tube, Squeeze, 8"	05700-003-22-89
8	1	Motor, 38 RPM	04320-004-99-36
9	1	Roller, Plastic	04320-111-65-27
10	1	Tube, Squeeze, 9"	05700-011-65-21
11	1	Motor, 14 RPM	04320-011-63-33

Complete Door Assembly
05700-005-07-44

NOTICE
*Machines with serial numbers before 23D415452 have a different door. Click **here** to open earlier manual.*

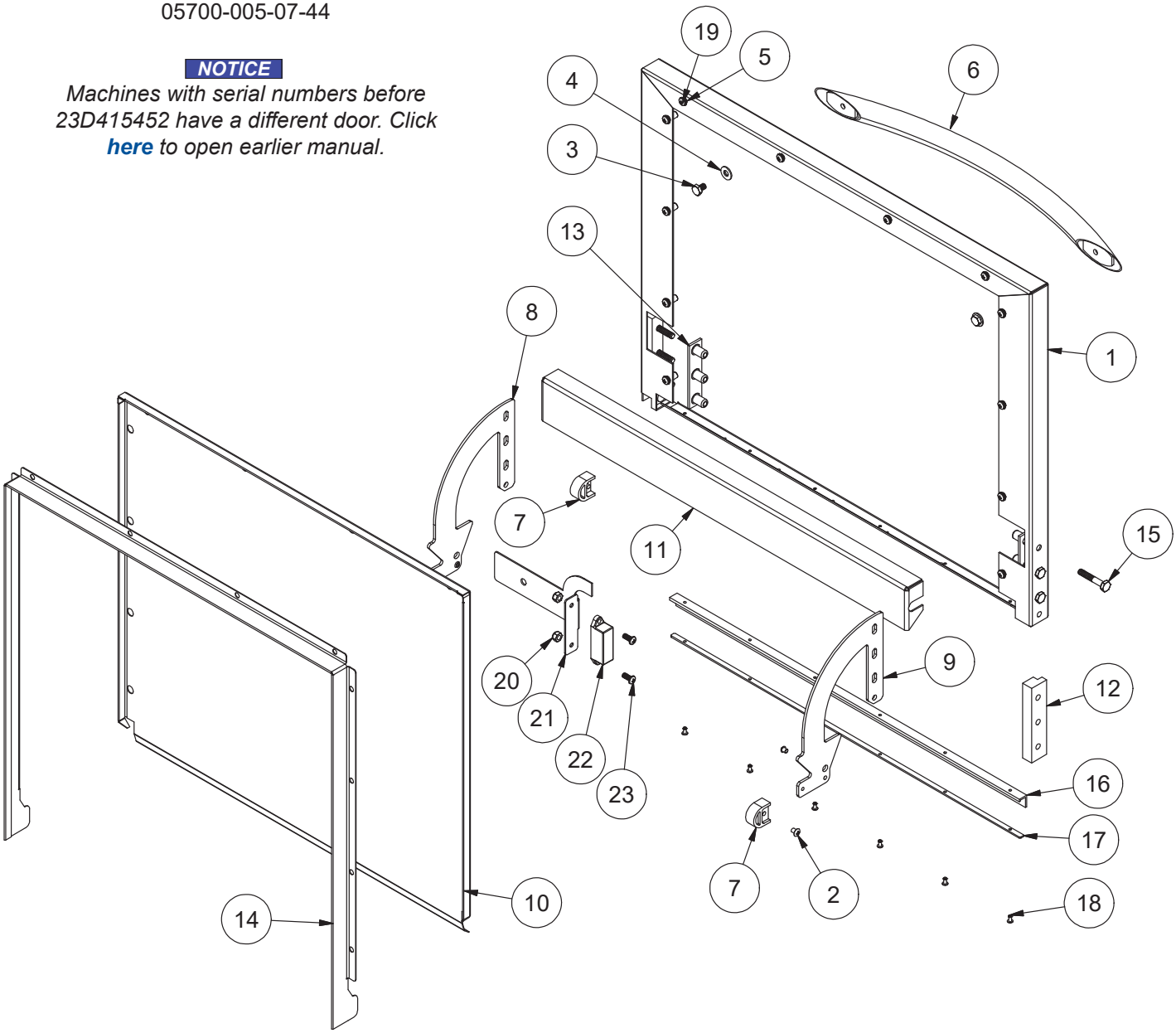

DOOR

ITEM	QTY	DESCRIPTION	PART NUMBER
1	1	Outer Door Weldment	05700-005-07-43
2	2	Screw, 10-32 x 1/4"	05305-173-01-00
3	2	Bolt, 1/4-20 x 3/8" Hex	05305-274-20-00
4	2	Washer, SS 1/4-20 ID	05311-174-01-00
5	12	Fastener, 10-32	05340-111-58-10
6	1	Door Handle	05700-003-26-62
7	2	Stop, Door Hinge	05700-003-32-55
8	1	Hinge, Left	05700-003-32-71
9	1	Hinge, Right	05700-003-32-72
10	1	Inner Door	05700-003-33-21
11	1	Baffle, Door	05700-003-33-38
12	2	Hinge Spacer	05700-003-33-42
13	2	Retaining Plate	05700-011-44-37
14	1	Channel, Door Seal	05700-003-55-49
15	6	Screw, 1/4-20 x 1 1/2" Hex	05305-274-23-00
16	1	Gasket, Door L	05330-004-36-05
17	1	Gasket Clamp	05700-004-36-56
18	6	Pop Rivet, 1/8" x 3/8"	05320-003-06-98
19	12	Screw, 10-32 x 1/2" Pan Phillips Head	05305-002-32-37
20	2	Locknut, 10-32 with Nylon Insert	05310-373-02-00
21	1	Bracket, Door Magnet	05700-004-52-68
22	1	Magnet, Door	05930-002-88-42
23	2	Screw, 10-32 x 1/2" Pan Phillips Head	05305-011-44-52

MISCELLANEOUS DOOR COMPONENTS

Parts are not shown to scale in relation to each other.

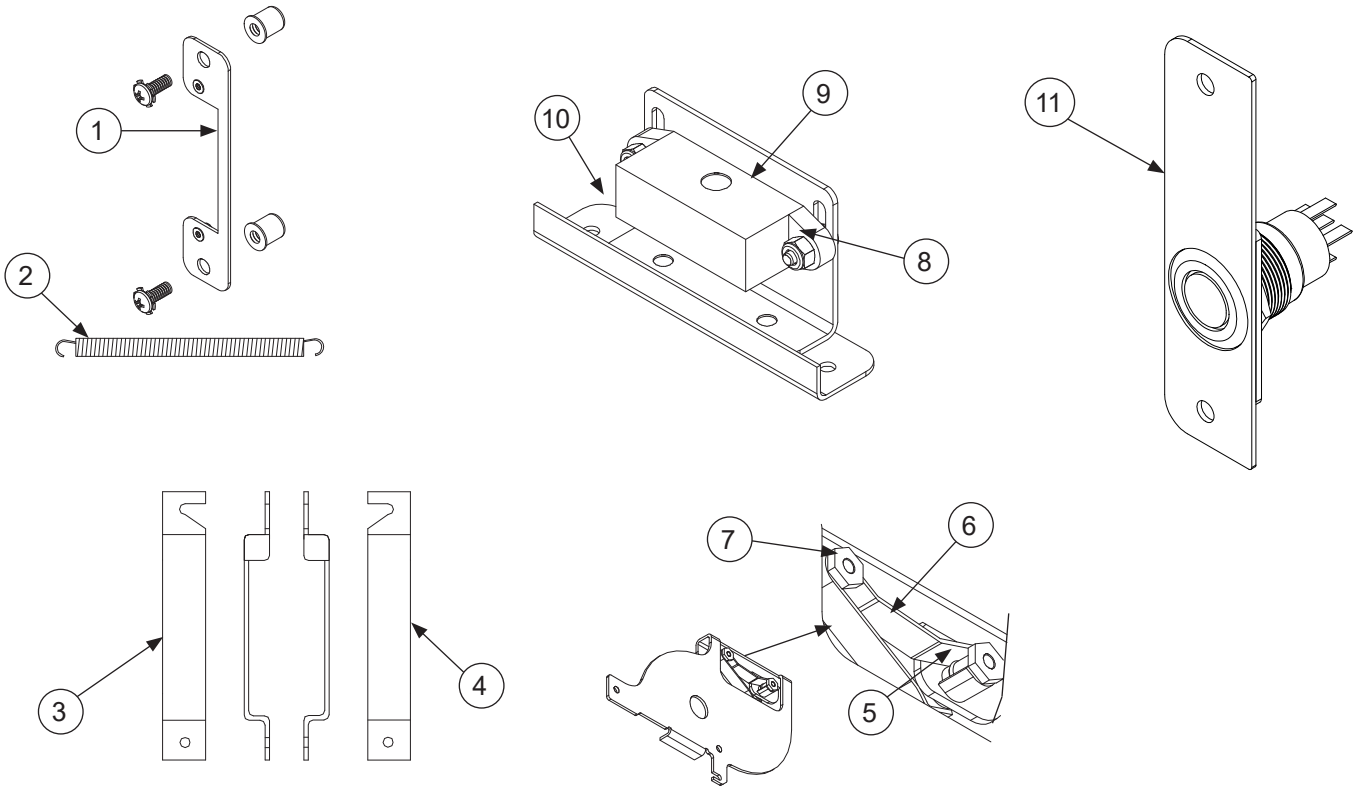

ITEM	QTY	DESCRIPTION	PART NUMBER
1	1	Switch Mounting Plate Assembly	05700-003-33-54
2	2	Door Spring	05700-003-32-85
3	1	Cover, Left Hinge Weldment	05700-004-36-80
4	1	Cover, Right Hinge Weldment	05700-004-36-81
		Hinges secured with Locknut, 1/4-20 Hex with Nylon Insert	05310-374-01-00
5	2	O-ring	05330-003-32-34
6	2	Latch Spring	05700-003-32-32
7	4	Latch Nut	05700-003-32-33
8	2 2	Locknut, 6-32 Hex with Nylon Insert Screw, 6-32 x 1/4”	05310-373-03-00 05305-171-01-00
9	1	Door Switch	05930-003-31-44
10	1 1	Door Switch Bracket Door Switch & Bracket Assembly	05700-003-31-43 05700-003-32-21
11	1	Complete Switch Mount Assembly	05700-005-07-45

HT-E-SEER DOOR INTERLOCK

Complete Door Interlock Assembly
05700-004-99-58

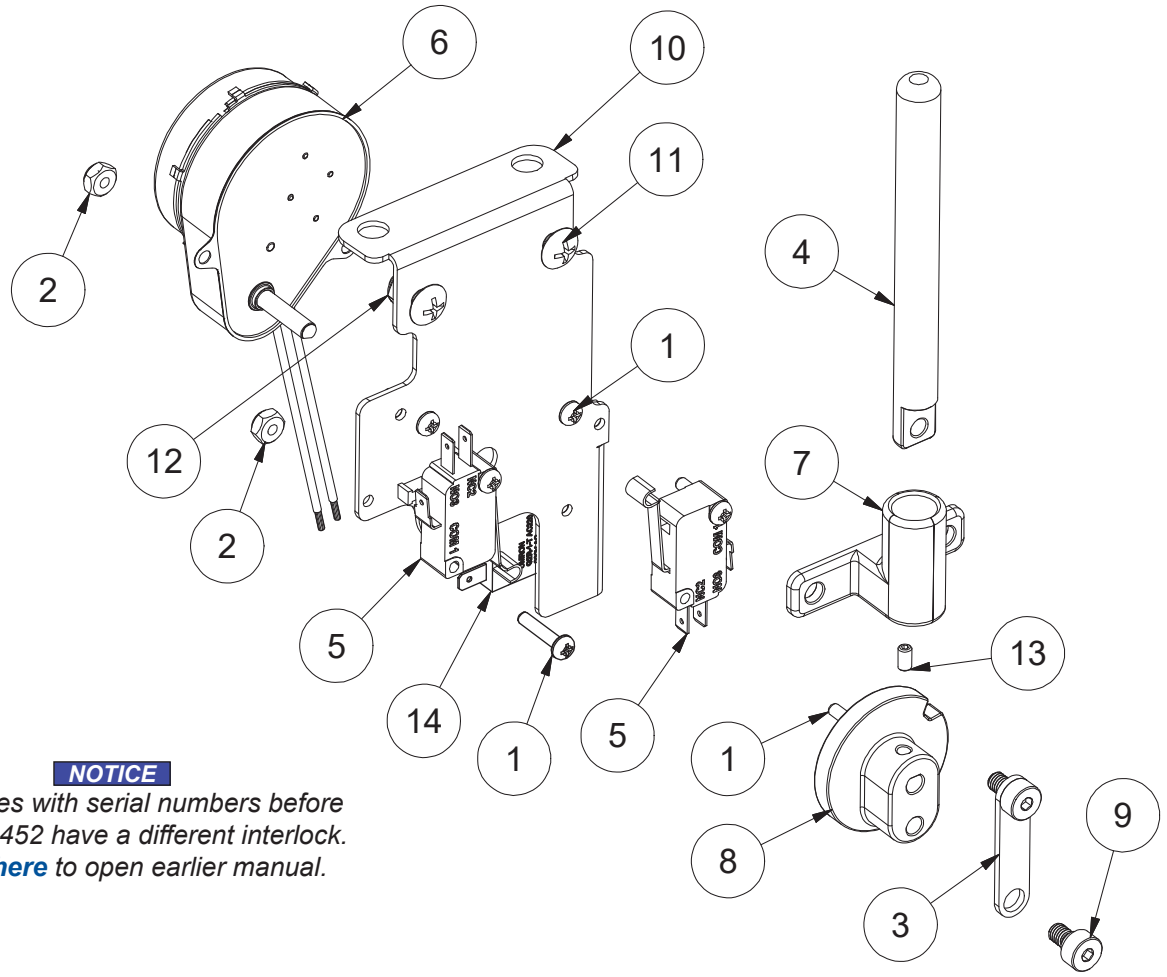

NOTICE

*Machines with serial numbers before 23D415452 have a different interlock. Click **here** to open earlier manual.*

ITEM	QTY	DESCRIPTION	PART NUMBER
1	6	Screw, 6-32 x 5/8"	05305-011-39-85
2	6	Locknut, 6-32 Hex with Nylon Insert	05310-373-03-00
3	1	Link, Interlock Connector	05700-004-71-37
4	1	Pin, Interlock	05700-004-71-49
5	2	Switch, Interlock	05930-004-71-36
6	1	Synchronous Gearmotor, 6 RPM, 230 V, 60 Hz	06105-004-70-04
7	1	Interlock Guide	05700-004-71-50
8	1	Interlock Cam	05700-004-71-39
9	2	Shoulder Screw, 10-32	05700-004-71-40
10	1	Bracket, Interlock	05700-004-99-63
11	2	Screw, 10-32 x 1/2"	05305-011-39-36
12	2	Locknut, 10-32 with Nylon Insert	05310-373-02-00
13	1	Set Screw, 6-32 x 1/4"	05305-004-71-42
14	1	Relay, 10 A, 220 VAC	05945-004-84-93

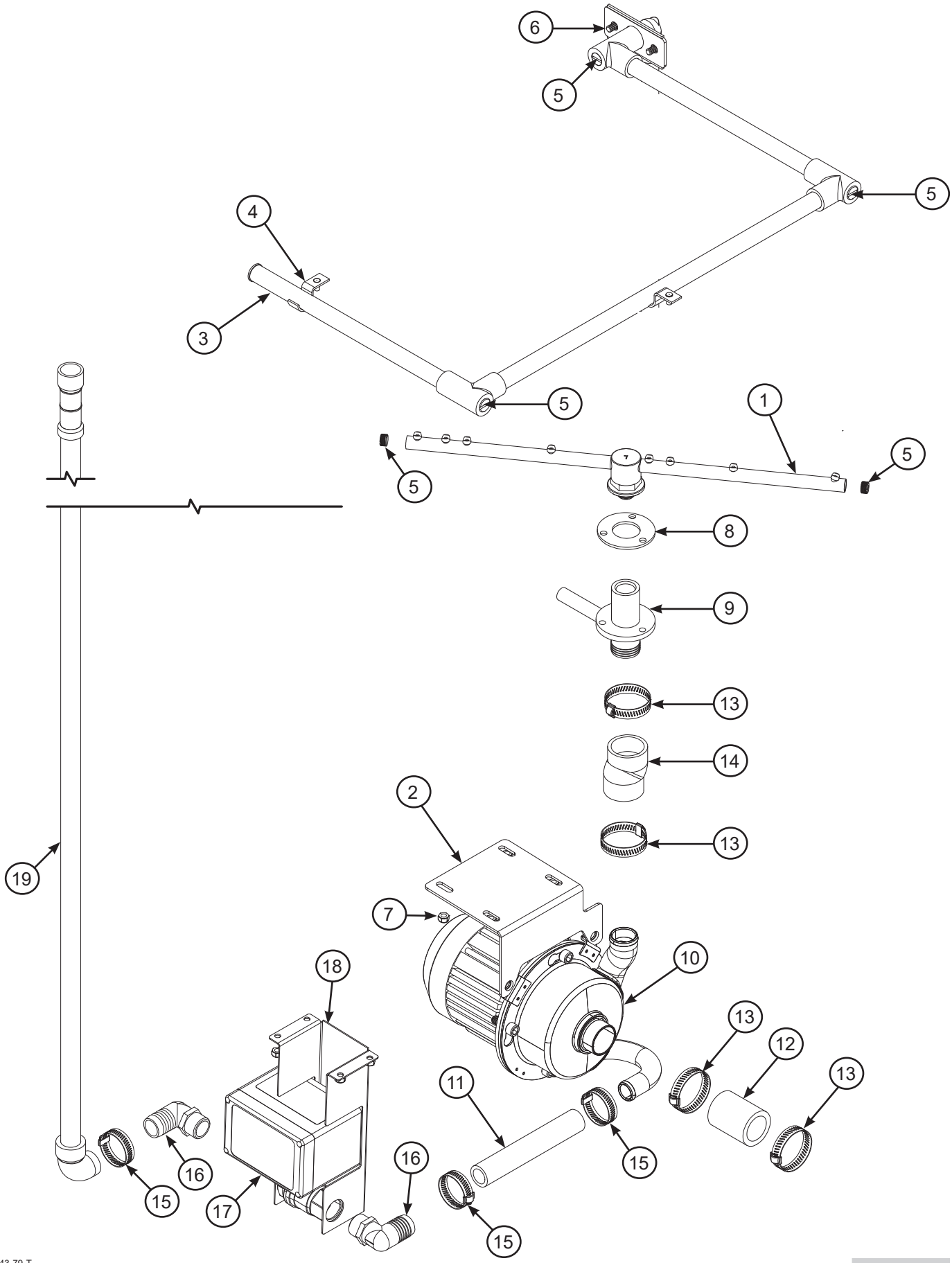
6
5
5
4
3
5
1
5
5
8
9
13
14
13
2
19
7
10
18
13
12
13
11
15
16
15
17
16
15

ITEM	QTY	DESCRIPTION	PART NUMBER
1	1	Wash Arm Assembly	05700-021-39-23
2	1	Motor Support	05700-004-40-61
3	1	Wash Halo	05700-004-42-21
4	2	Pipe Clamp	05700-000-35-06
5	5	Wash Arm End-cap	05700-003-31-59
6	2	Screw, 1/4-20 x 1/2"	05307-011-36-96
7	4	Locknut, 1/4-20 Hex with Nylon Insert	05310-374-01-00
8	1	Manifold Gasket	05330-002-34-77
9	1	Wash Hub	05700-004-43-04
10	1	Wash Motor	See Motors page.
11	1	Discharge Hose, 7/8" x 8"	05700-004-43-76
12	1	Hose, 1 1/4" x 2 3/4"	05700-011-44-48
13	4	Clamp, 1 1/16" to 2"	04730-719-18-00
14	1	Hose, Manifold Bottom	05700-001-22-92
15	3	Clamp, 13/16" to 1 1/2"	04730-719-06-09
16	2	Hosebarb, 90-Degree, 3/4" x 1"	04730-011-65-87
17	1	Drain Valve Assembly, 208/230 V	04730-003-33-64
	1	Drain Valve Assembly, 115 V (for 460 V Machine)	04730-003-34-60
18	1	Bracket, Drain Valve Support, 208/230 V	05700-004-35-85
	1	Bracket, Drain Valve Support, 460 V	05700-004-42-01
19	1	Drain Hose	04720-004-32-00

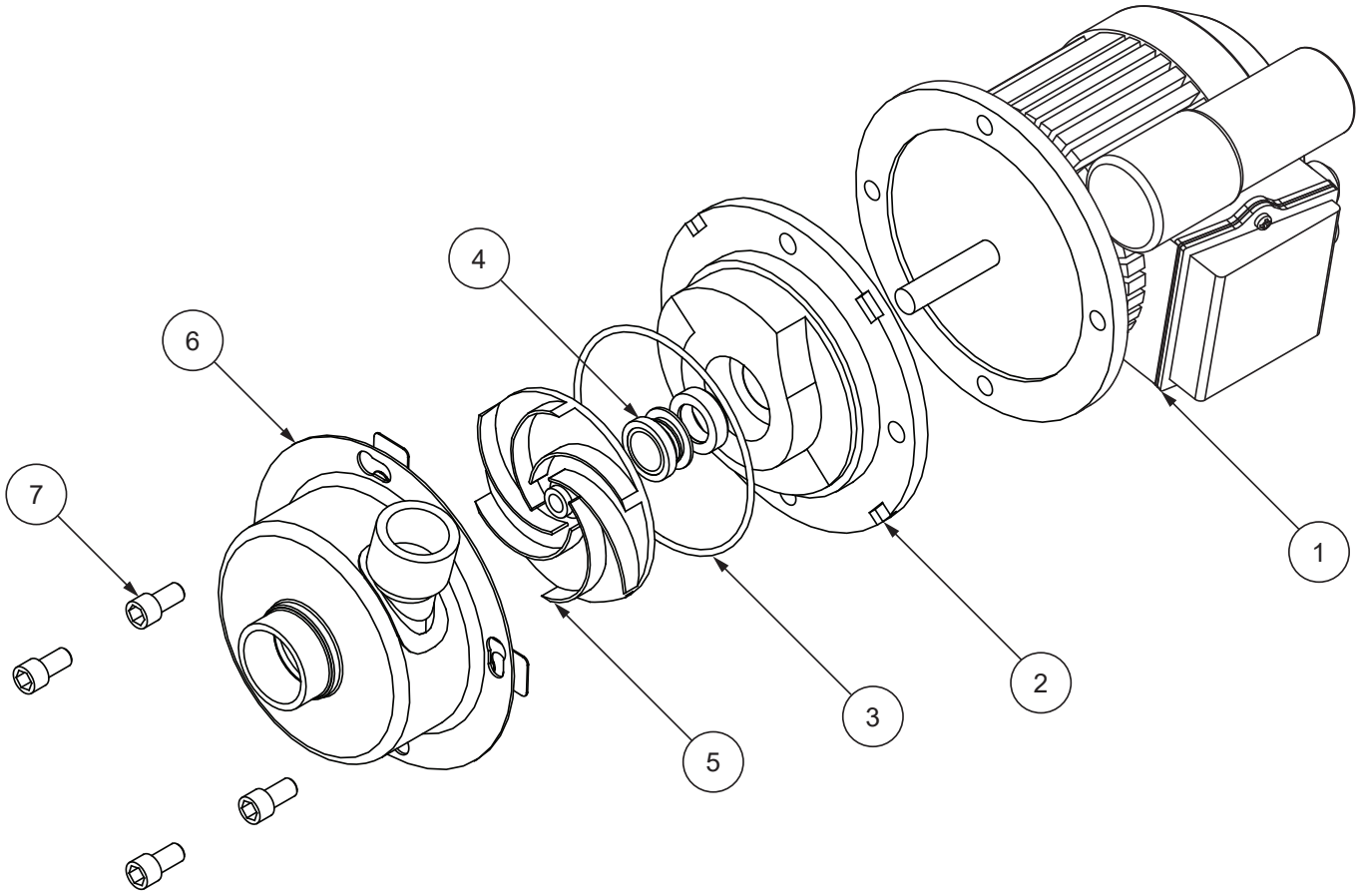

ITEM	QTY	DESCRIPTION	PART NUMBER
1	1	Pump and Motor, 208/230 V Pump and Motor, 460 V	06105-004-35-22 06105-003-52-78
2	1	Seal Plate, 208/230 V Seal Plate, 460 V	05700-002-81-87 05700-002-06-22
3	1	Case O-ring, 208/230 V Case O-ring, 460 V	05330-002-81-83 05330-002-87-02
4	1	Mechanical Seal, 208/230 V Mechanical Seal, 460 V	05330-002-34-22 05330-002-87-16
5	1	Impeller Assembly, 208/230 V Impeller Assembly, 460 V	05700-002-81-86 05700-002-06-19
6	1	Pump Casing 208/230 V Pump Casing 460 V	05700-002-85-01 05700-002-06-20
7	1	Case Capscrew	05305-002-81-88

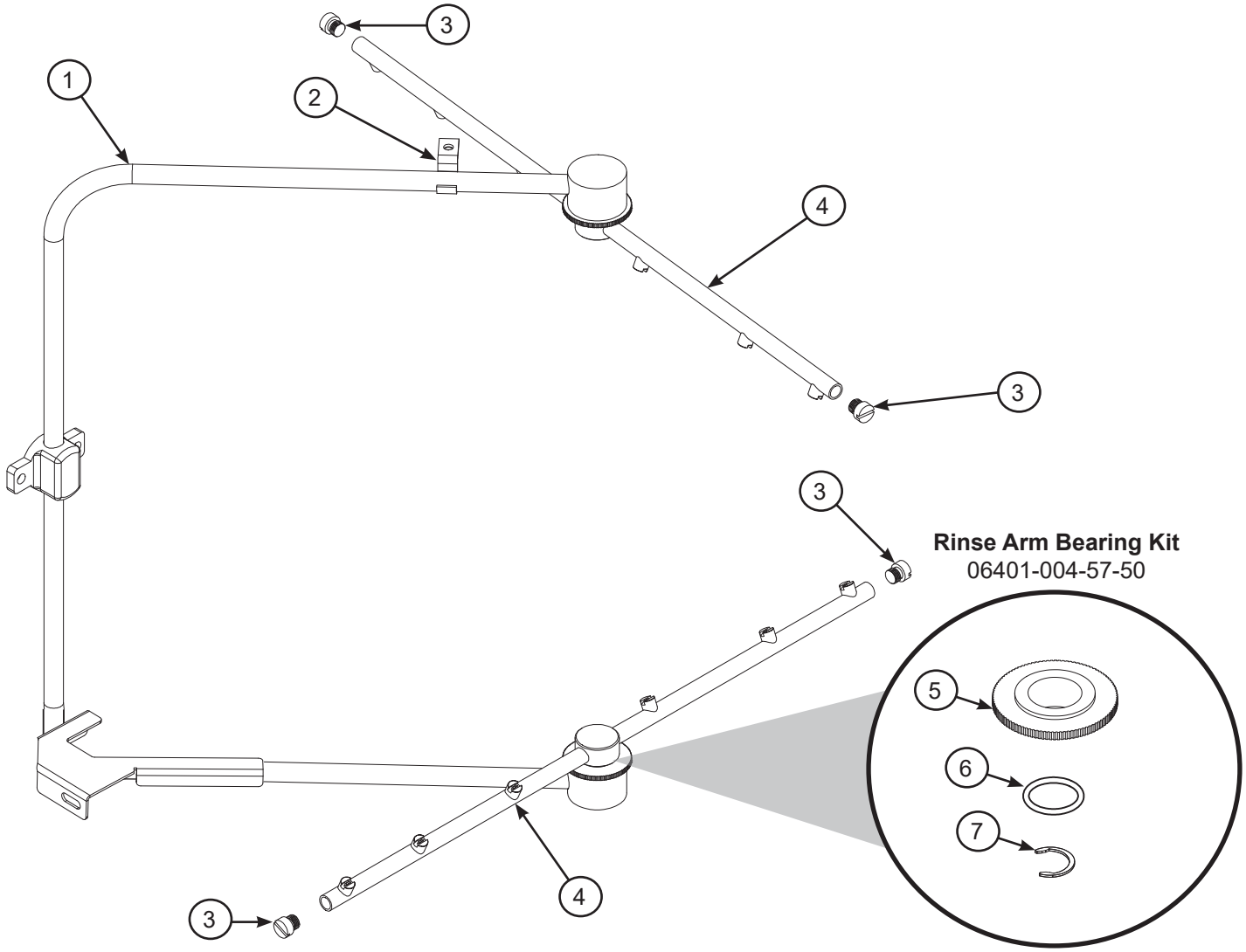

ITEM	QTY	DESCRIPTION	PART NUMBER
1	1	Complete Rinse Manifold Assembly	05700-004-40-58
2	1	Pipe Clamp	05700-000-35-06
3	4	Rinse Arm End-cap (includes o-ring)	05700-004-34-62
4	2	Complete Rinse Arm Assembly	05700-004-39-39
	2	Rinse Arm	05700-004-38-75
5	2	Bearing Assembly, Rinse Arm	05700-004-54-71
6	2	O-ring (included in item #5)	05330-002-60-69
7	2	Retaining Ring	05340-112-01-11

SHOCK ABSORBER (WATER ARRESTOR) OPTION

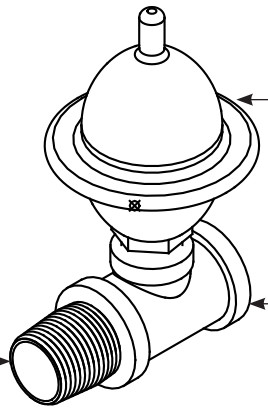

NOTICE

HT-E-SEER has a water arrestor as standard equipment. See the HT-E-SEER Plumbing page.

PRESSURE REGULATING VALVE (PRV) OPTION

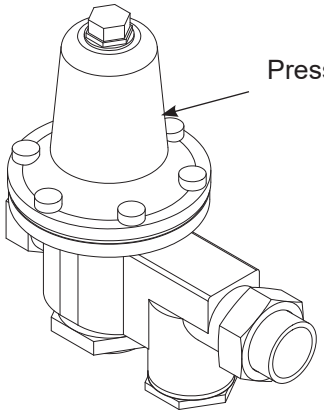

NOTICE

HT-E-SEER has a PRV as standard equipment. See the HT-E-SEER Plumbing page.

SCALE PREVENTION SYSTEM (SPS) OPTION

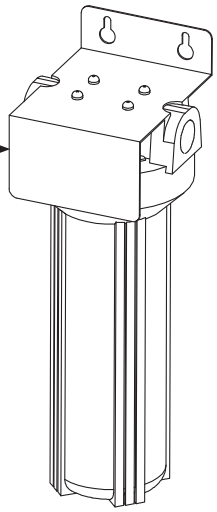

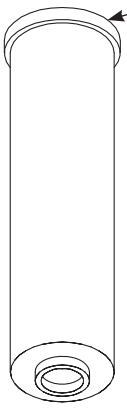

NOTICE

Must be installed vertically. The provided bracket is secured to the wall. Observe proper inlet/outlet water directions (flow directions are molded into the top of the head). Line pressure should be released before changing cartridges. Machine should be delimed before installation.

Complete Inlet Plumbing Assembly, 208/230 V
05700-004-09-03

Complete Inlet Plumbing Assembly, 115 V (for 460 V Machine)
05700-004-44-40

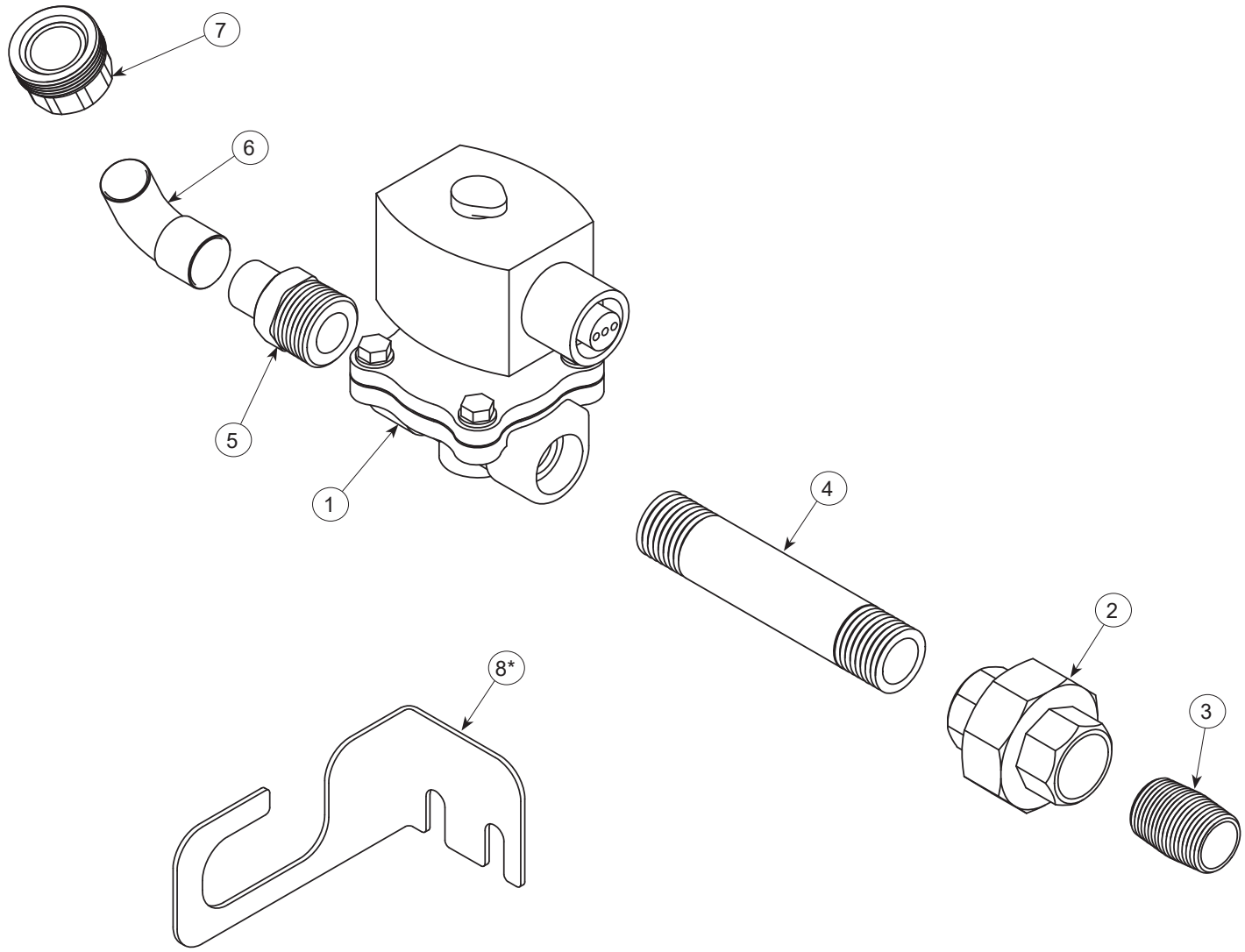

*Item not included in part number of complete plumbing assembly and must be ordered separately.

HT-E PLUMBING

ITEM	QTY	DESCRIPTION	PART NUMBER
1	1	Valve, 1/2", 208/230 V Valve, 1/2", 115 V (for 460 V Machine)	04810-003-71-56 04810-003-71-55
2	1	Union, 1/2" x 1/2" Brass	04730-003-62-44
3	1	Nipple, 1/2" Close Brass	04730-207-15-00
4	1	Nipple, 1/2" x 4" NPT Brass	04730-207-04-00
5	1	Adapter, 1/2" Fitting, Male	04730-011-59-53
6	1	Elbow, 1/2"	04730-406-31-01
7	1	Hose Adapter	04720-004-24-68
8*	1	Bracket, Plumbing Support	05700-004-56-19

**Item not included in part number of complete plumbing assembly and must be ordered separately.*

HT-E-SEER PLUMBING

Complete SEER Plumbing Assembly, 208/230 V
05700-004-63-79

Complete SEER Plumbing Assembly, 460 V
05700-004-78-45

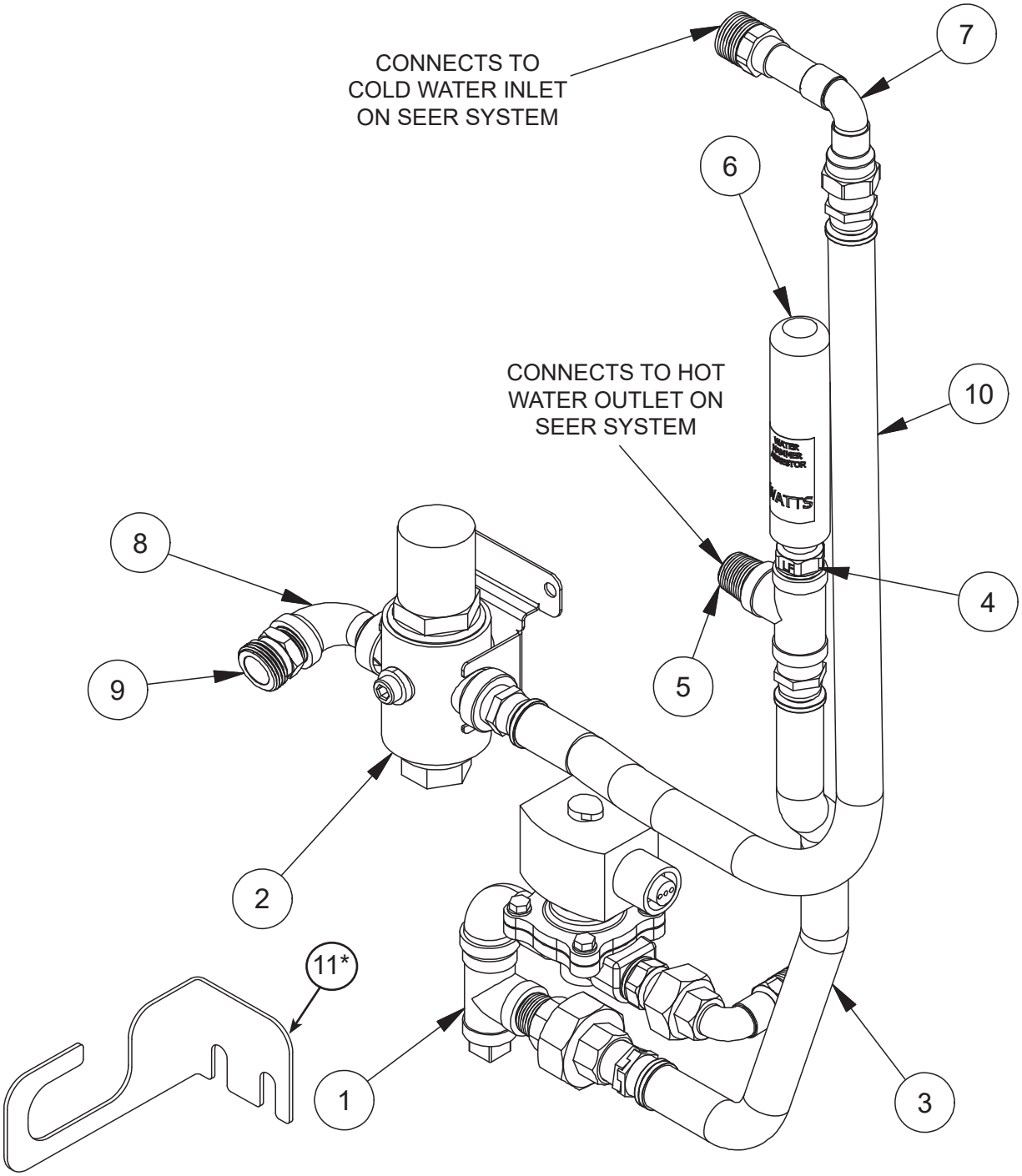

**Item not included in part number of complete SEER plumbing assembly and must be ordered separately.*

HT-E-SEER PLUMBING

ITEM	QTY	DESCRIPTION	PART NUMBER
1	1	Inlet Plumbing Assembly, 208/230 V Inlet Plumbing Assembly, 115 V (for 460 V Machine)	05700-004-53-98 05700-004-78-48
2	1	Pressure Regulating Valve, Dial-set	05700-004-94-35
3	1	Booster Tank Discharge Assembly	05700-004-55-97
4	1	Tee, 1/2" Brass	04730-211-27-00
5	1	Nipple, 1/2" Close Brass	04730-207-15-00
6	1	Water Hammer Arrestor, 1/2"	04730-004-58-56
7	1	SEER Inlet Plumbing Assembly	05700-004-60-46
8	1	Elbow, 90-degree, 1/2" Street Brass	04730-206-08-00
9	1	Adapter, Double Male, 3/4-11.5 x 1/2-14	04720-004-51-55
10	1	Inlet Hose Assembly	05700-004-71-02
11*	1	Bracket, Plumbing Support	05700-004-56-19

**Item not included in part number of complete SEER plumbing assembly and must be ordered separately.*

Complete Rinse Plumbing Assembly
05700-004-43-02

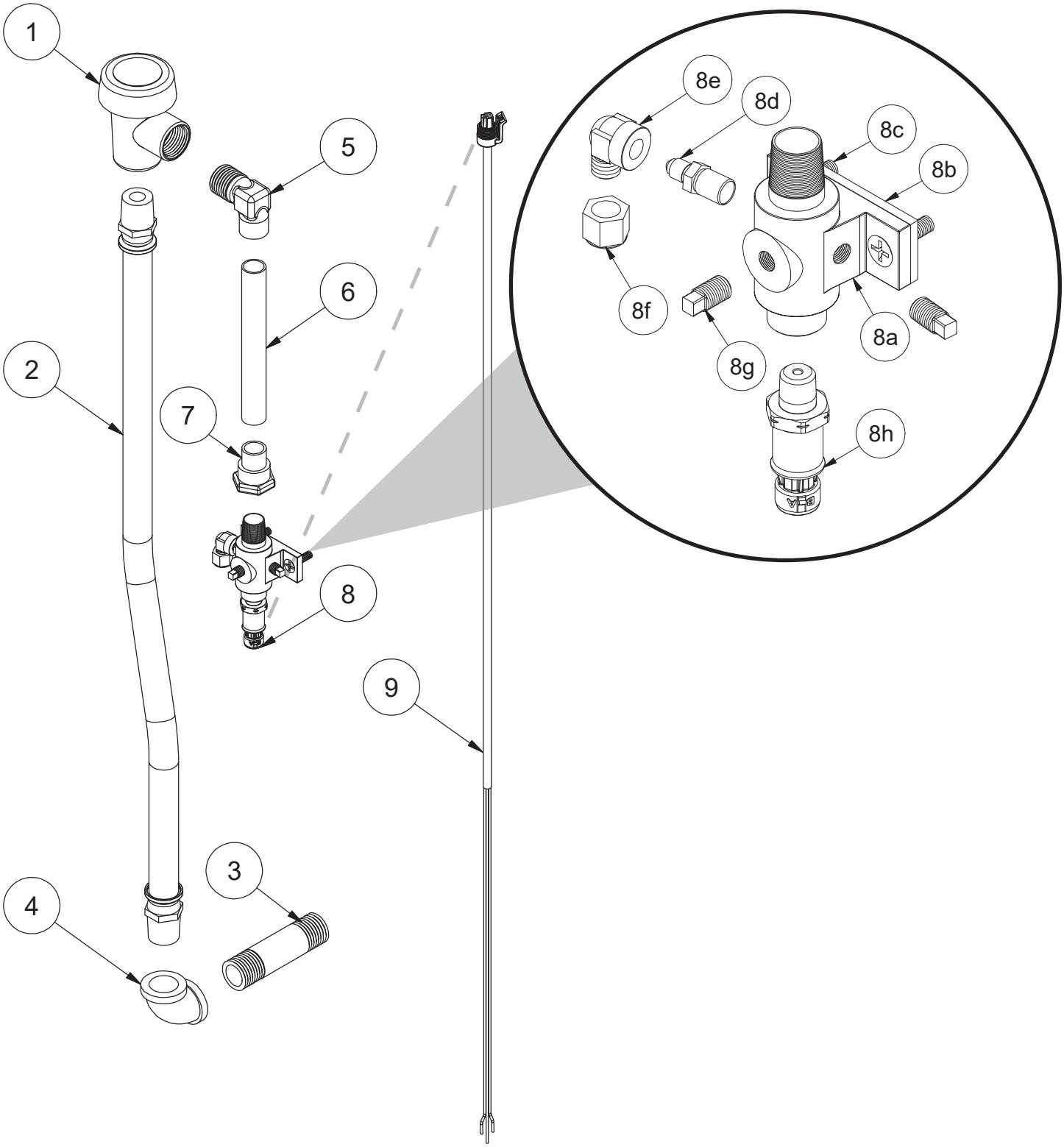

RINSE PLUMBING

ITEM	QTY	DESCRIPTION	PART NUMBER
1	1	Vacuum Breaker, 1/2" Brass	04820-003-06-13
2	1	Hose, Red, 1/2" ID, 19"	05700-004-33-84
3	1	Nipple, 1/2" x 3", Brass	04730-004-20-10
4	1	Elbow, 1/2", 90-degree, Brass	04730-011-42-96
5	1	Elbow, 90-degree	04730-406-32-01
6	1	Pipe, 4 3/4", Copper	05700-002-91-02
7	1	Adapter, 1/2"	04730-002-64-68
8	1	Complete Rinse Injector Assembly	05700-004-43-86
8a	1	Rinse Injector Only	09515-004-22-73
8b	1	Gasket, Rinse Injector	05330-003-75-91
8c	2	Screw, 1/4-20 x 1"	05305-011-81-58
8d	1	Check Valve	04820-111-51-14
8e	1	Fitting, Outlet Elbow	04820-111-51-18
8f	1	Nut, Tube, 1/8"	04730-011-59-45
8g	2	Plug, 1/8" Brass	04730-209-07-37
8h	1	Pressure Transducer	05945-004-17-01
9	1	Harness, Transducer	05700-004-33-62

RINSE TANK

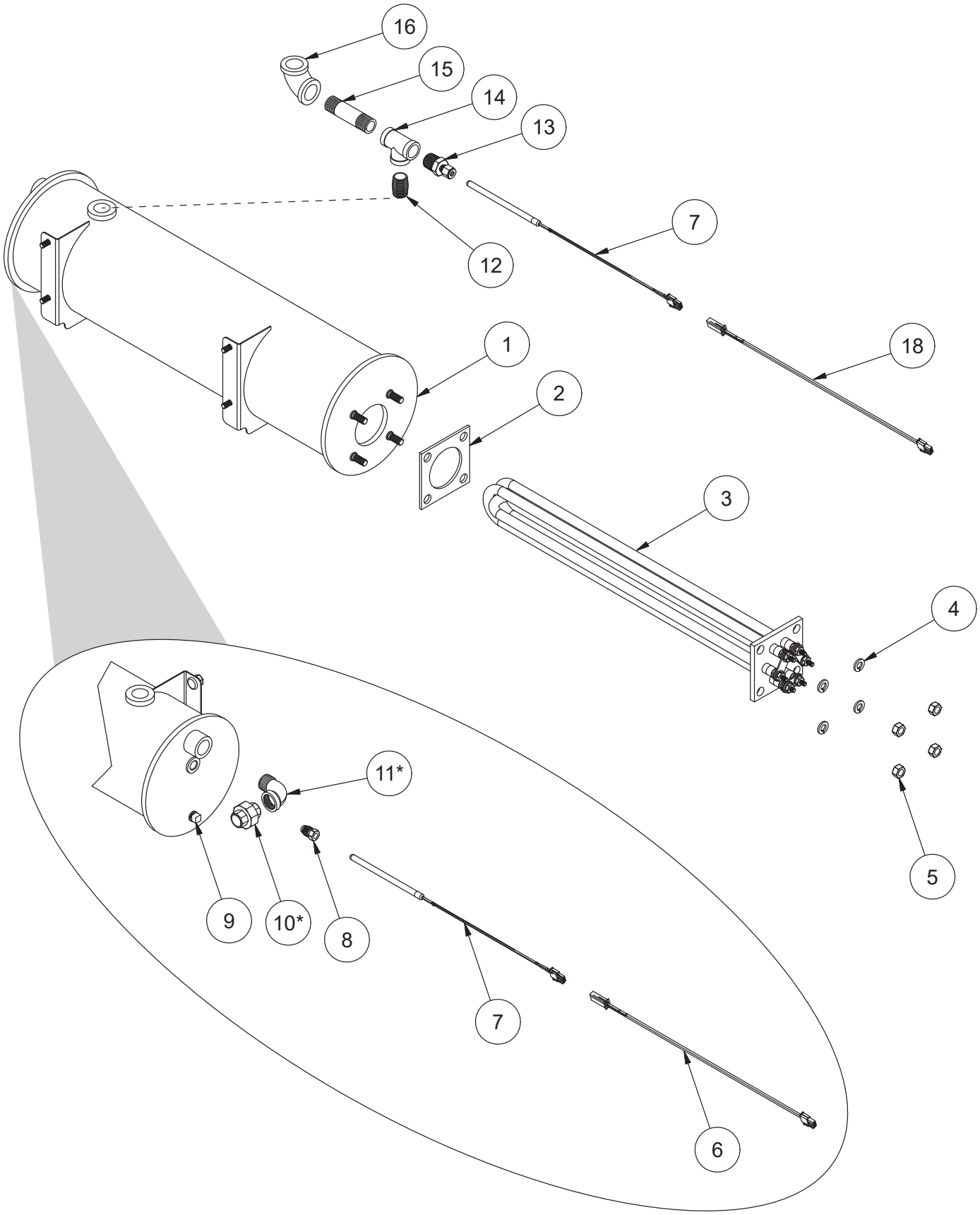

RINSE TANK

ITEM	QTY	DESCRIPTION	PART NUMBER
1	1	Rinse Tank, 208/230 V	05700-004-41-88
	1	Rinse Tank, 460 V	05700-004-44-46
2	1	Heater Gasket	05330-011-47-79
3	1	Rinse Heater, 5.45 kW, 208-230 V	04540-004-45-12
	1	Rinse Heater, 5.45 kW, 460 V	04540-121-65-99
4	4	Lockwasher, Split 5/16"	05311-275-01-00
5	4	Nut, Hex 5/16-18	05310-275-01-00
6	1	Cable, Temperature Probe	05700-004-33-23
7	2	Thermistor Probe, 4" with 18" Cable	06685-004-34-58
8	1	Fitting, 1/4", Brass Nut/Sleeve	05310-924-02-05
9	1	Plug, 1/4" Brass	04730-209-01-00
10*	1	Union, 1/2" x 1/2" Brass	04730-003-62-44
11*	1	Elbow, 90-degree, 1/2" Street Brass	04730-206-08-00
12	1	Nipple, 1/2" Close Brass	04730-207-15-00
13	1	Fitting, 1/2" x 1/4"	05700-004-36-74
14	1	Tee, 1/2" Brass	04730-211-27-00
15	1	Nipple, 1/2" x 3" Brass	04730-004-20-10
16	1	Elbow, 90-degree, 1/2" Brass	04730-011-42-96
17	1	Thermostat, Rinse Tank High-limit (Not Shown)	05930-004-33-12
18	1	Cable, Temperature Probe	05700-004-33-58

**Not used on HT-E-SEER. See Item #1 in HT-E-SEER Plumbing section.*

Complete SEER System Assembly, 208/230 V
05700-004-63-06

Complete SEER System Assembly, 115 V (for 460 V Machine)
05700-004-64-72

NOTICE *Machines with serial numbers before 19G376587 have an older version of the SEER System. Click **here** to open manual with the older version.*

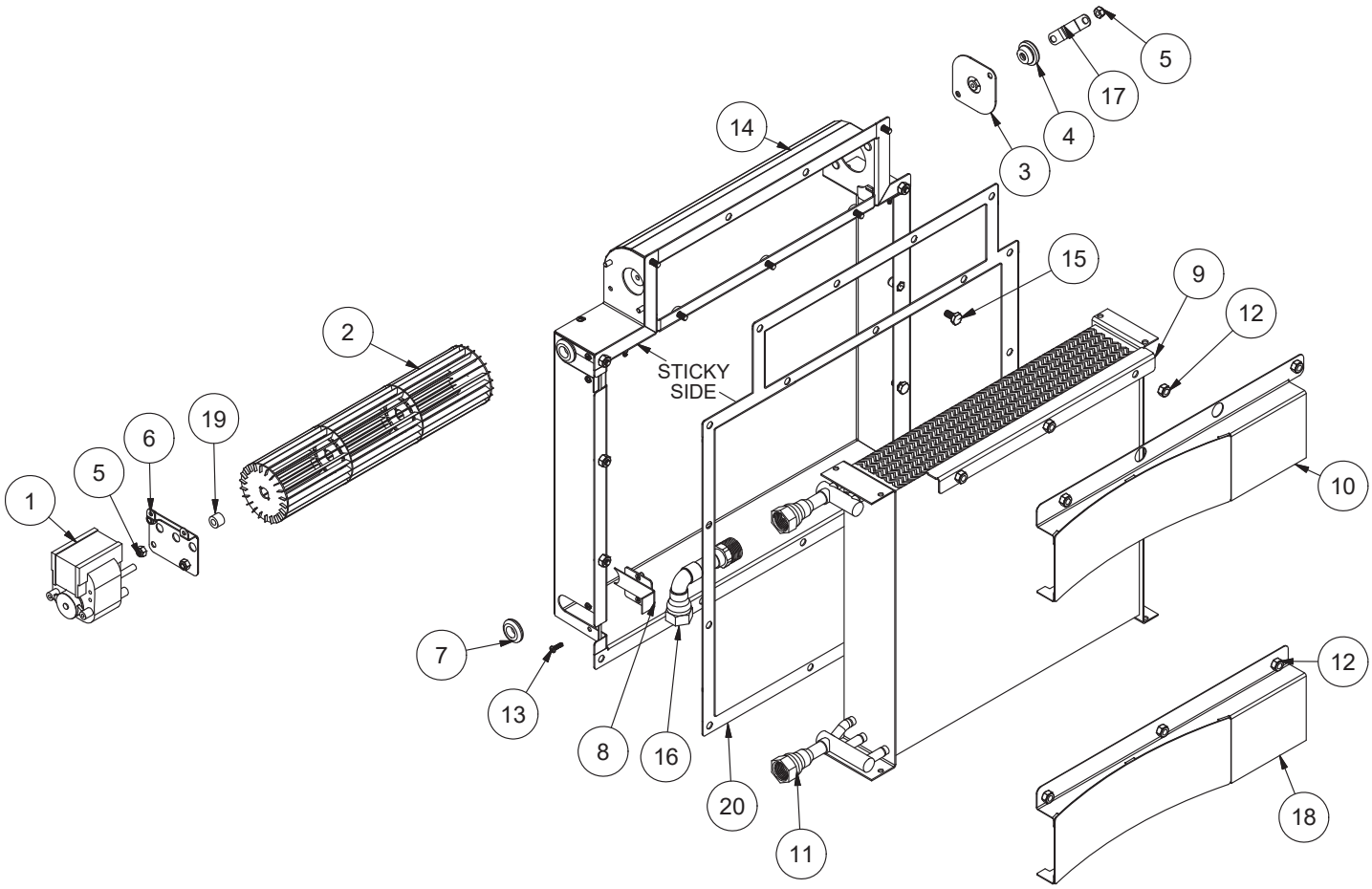

ITEM	QTY	DESCRIPTION	PART NUMBER
1	1	Motor, Fan, 208/230 V Motor, Fan, 115 V (for 460 V Machine)	05999-004-63-31 05999-004-64-71
2	1	Wheel, Blower	05999-004-59-13
3	1	Bracket, Bearing Boot	05700-004-50-94
4	1	Bushing and Housing Assembly	03120-004-50-88
5	5	Locknut, 10-24 Hex with Nylon Insert	05310-373-01-00
6	1	Bracket, Motor Adjustment	05700-004-58-81
7	2	Grommet, Push-in, 3/4" ID	05330-004-59-14
8	2	Bracket, Enclosure Filler Plate	05700-004-58-93
9	1	Diversion Plate	05700-004-59-04
10	1	Upper Shield	05700-004-58-98
11	1	Heat Exchanger, 3/8" Tubes	04420-004-58-96
12	12	Locknut, 1/4-20 Hex with Nylon Insert	05310-374-01-00
13	8	Screw, 6-32 x 1/2"	05305-004-23-63
14	1	Condenser Assembly	05700-004-58-94
15	2	Bolt, 1/4-20 x 1/2"	05305-274-02-00
16	1	Plumbing, SEER Inlet	05700-004-60-46
17	1	Bracket, Bearing Hard Stop	05700-004-67-53
18	1	Lower Shield	05700-004-63-04
19	1	Spacer, 1/2" OD 1/4" ID Nylon, Black	03120-004-95-13
20	1	Gasket, Exchanger to Tub	05330-004-59-16

NOTICE *Machines with serial numbers before 19G376587 have an older version of the SEER System. Click **here** to open manual with the older version.*

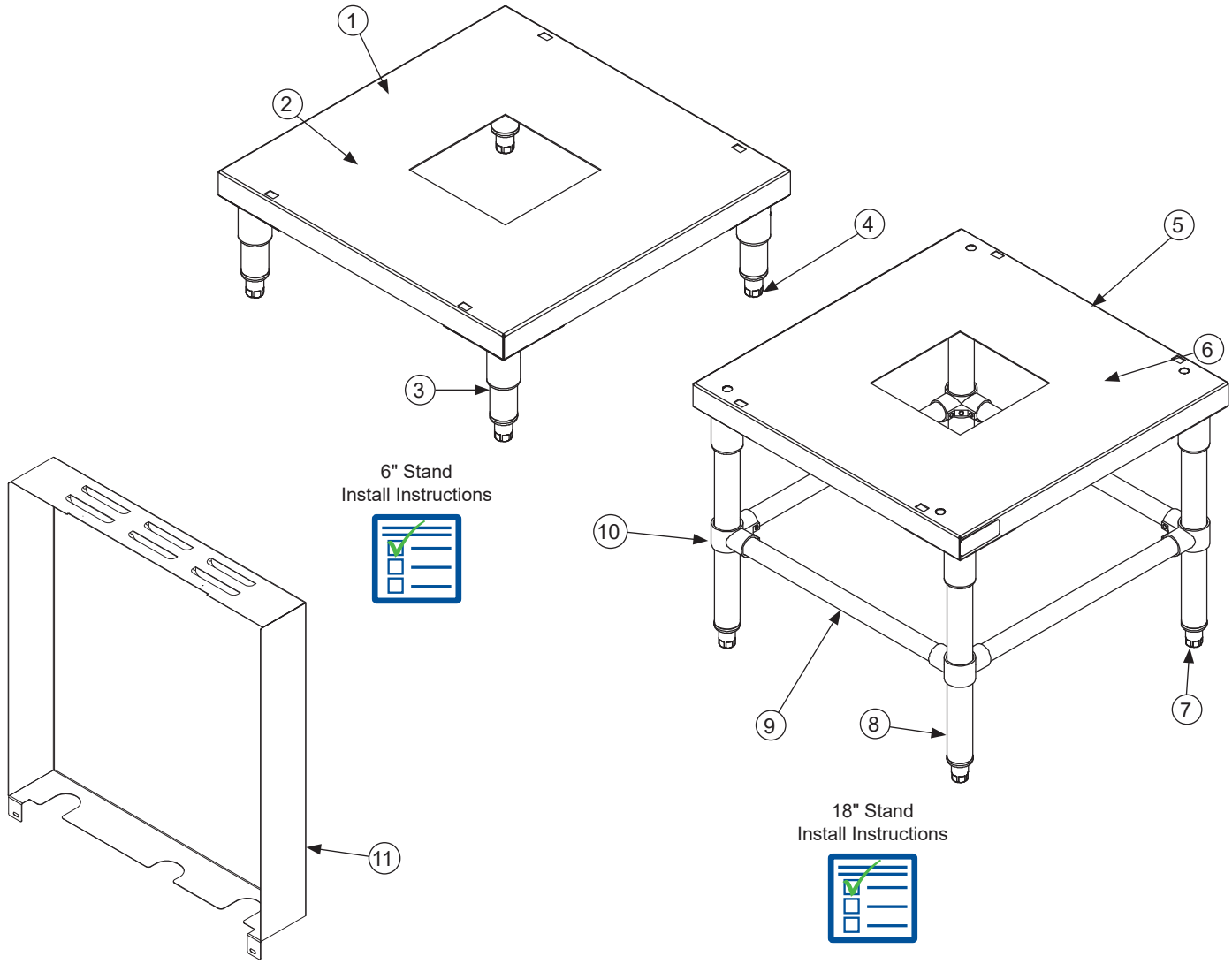

ITEM	QTY	DESCRIPTION	PART NUMBER
1	1	6” Stand Assembly	05700-003-34-24
2	1	Stand	05700-002-88-82
3	4	6” Leg	05700-021-61-10
4	4	Bullet Foot	05340-108-01-03
5	1	18” Stand Assembly	05700-003-34-25
6	1	Stand	05700-002-88-82
7	4	Bullet Foot	05340-108-01-03
8	4	18” Leg	05700-002-89-47
9	4	Cross Brace	05700-003-25-90
10	4	Cross Member Bracket	04730-003-25-89
11	1	Back Panel	05700-004-58-14
11a	3	Edge Guard, Back Panel (Not Shown)	05330-002-83-04

FRAME

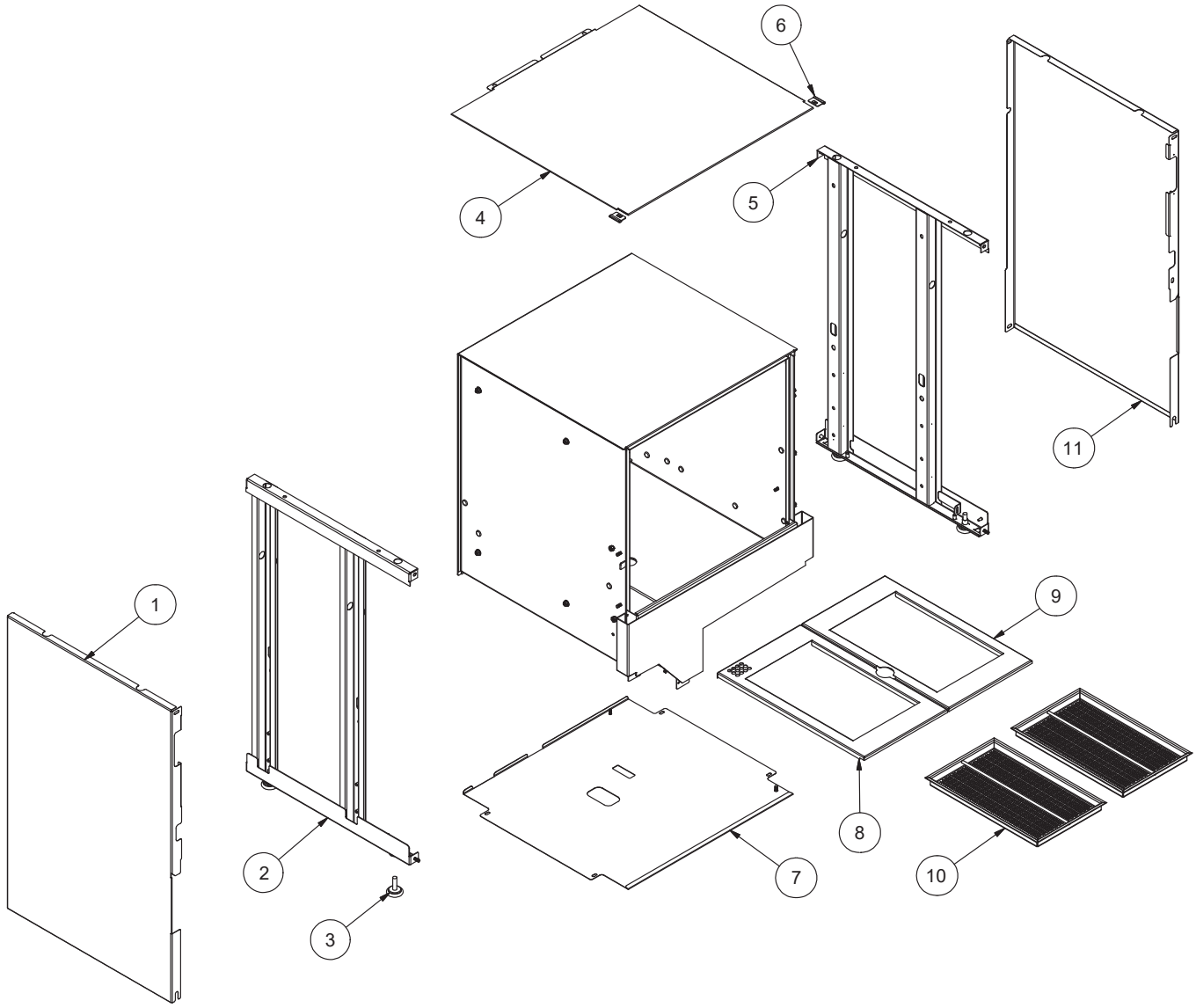

ITEM	QTY	DESCRIPTION	PART NUMBER
1	1	Shroud, Left	05700-003-37-04
2	1	Frame, Left	05700-003-31-91
3	4	Adjustable Foot	05340-002-71-71
4	1	Shroud, Top	05700-003-37-06
5	1	Frame, Right	05700-003-31-90
6	2	Plug, Shroud	05700-003-32-50
7	1	Panel, Bottom	05700-004-44-54
8	1	Support, Strainer Left	05700-004-40-52
9	1	Support, Strainer Right	05700-004-40-53
10	2	Strainer	05700-004-09-43
11	1	Shroud, Right	05700-004-36-82

MISCELLANEOUS PARTS

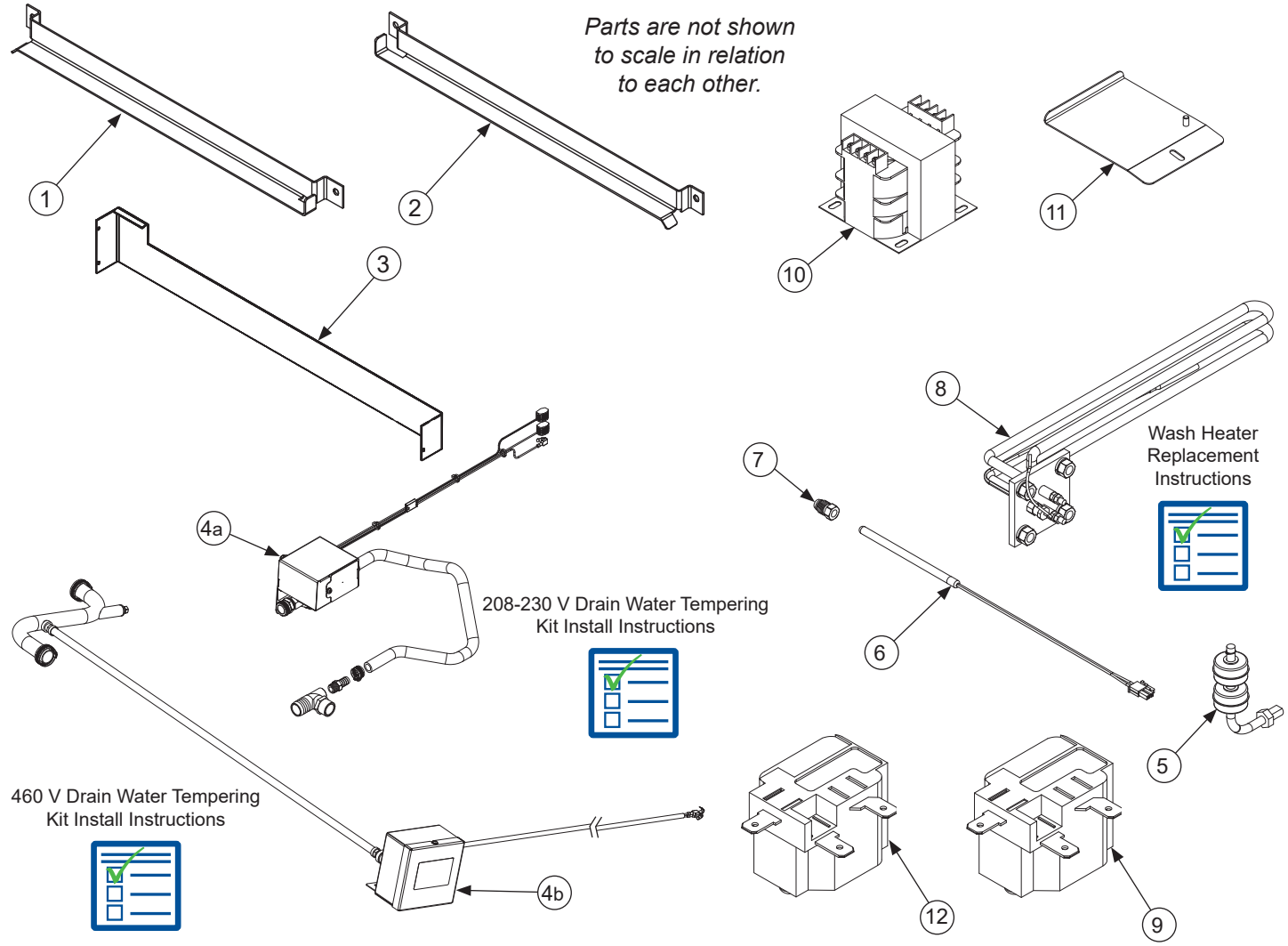

ITEM	QTY	DESCRIPTION	PART NUMBER
1	1	Rail, Left Rack	05700-031-37-89
2	1	Rail, Right Rack	05700-031-37-88
3	1	Splash Shield	05700-003-33-51
4a 4b	1	Drain Water Tempering Kit, 208-230 V Drain Water Tempering Kit, 460 V	06401-004-60-64 06401-004-56-12
5	1	Dual Float Switch	06680-121-70-16
6	1	Thermistor Probe, 4" with 18" Cable	06685-004-34-58
7	1	Probe Fitting, 1/4" Brass	05310-924-02-05
8	1	Wash Heater, 4 kW, 208-230 V Wash Heater, 4 kW, 460 V Gasket, Wash Heater (Not Shown)	04540-003-99-44 04540-004-12-29 05330-011-61-34
9	1	Thermostat, Wash Tank High-limit with Compression Fitting	05930-004-33-15
10	1	Transformer, 460 V	05950-004-71-04
11	1	Transformer Bracket, 460 V	05700-004-44-55
12	1	Thermostat, Rinse Tank High-limit	05930-004-33-12

NOTICE

*Machines with serial numbers before 23D415452 have a different schematic. Click **here** to open earlier manual.*

DISHSTAR SCHEMATIC
HT-E/HT-E-SEER

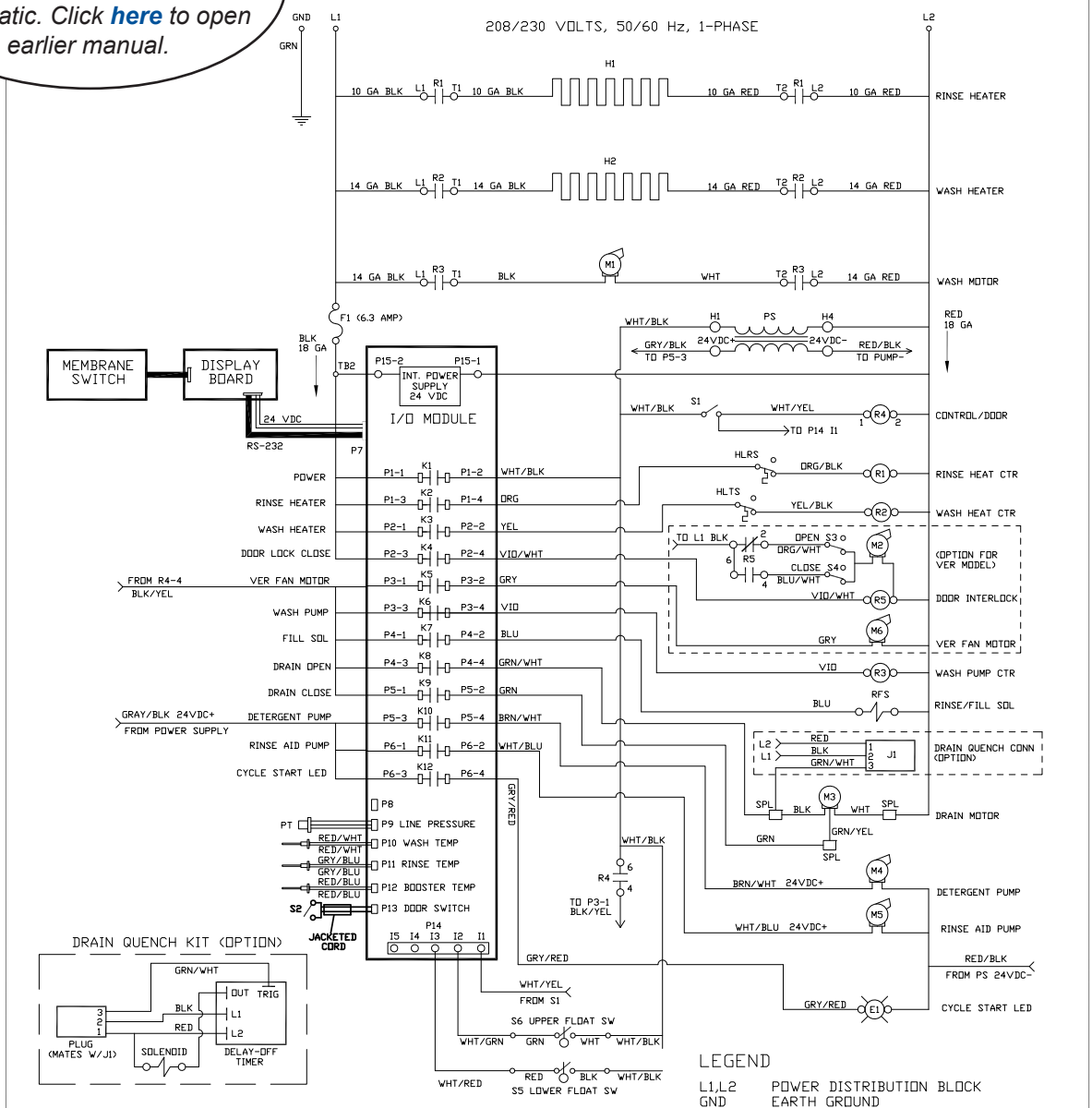

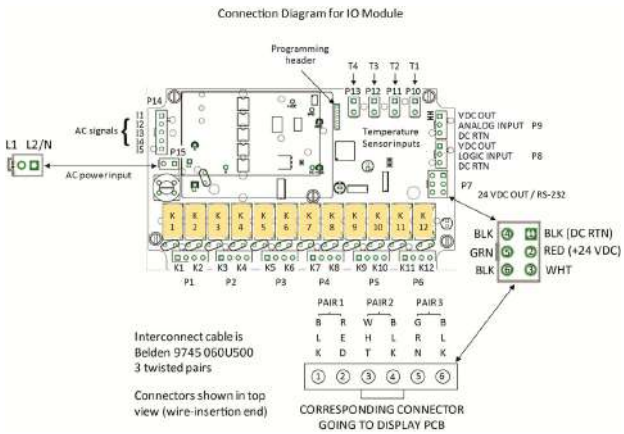

PART NUMBER: 09905-005-04-89 REV C

LEGEND

L1,L2	POWER DISTRIBUTION BLOCK
GND	EARTH GROUND
E1	CYCLE START LED
H1	HEATER, RINSE
H2	HEATER, WASH
M1	MOTOR, WASH PUMP
M2	MOTOR, DOOR INTERLOCK(OPTION)
M3	MOTOR, DRAIN
M4	MOTOR, DETERGENT PUMP
M5	MOTOR, RINSE AID PUMP
M6	MOTOR, VER FAN (OPTION)
R1	CONTACTOR, RINSE HEATER
R2	CONTACTOR, WASH HEATER
R3	CONTACTOR, WASH PUMP
R4	RELAY, CONTROL
F1	FUSE- L1 CONTROL
S1	SWITCH, DOOR
S2	SWITCH, CYCLE START
S3	SWITCH, DOOR LOCK OPEN (OPTION)
S4	SWITCH, DOOR LOCK CLOSE (OPTION)
S5	SWITCH, FLOAT HEATER CONTROL
S6	SWITCH, FLOAT FILL/DRAIN CONTROL
HLTS	HIGH-LIMIT T-STAT, WASH HEATER
HLRS	HIGH-LIMIT T-STAT, RINSE HEATER
RFS	RINSE/FILL SOLENOID
PT	PRESSURE TRANSDUCER
PS	POWER SUPPLY 24VDC
J1	CONNECTOR, DRAIN QUENCH (OPTION)
SPL	SPLICE

NOTICE

*Machines with serial numbers before 23D415452 have a different schematic. Click **here** to open earlier manual.*

DISHSTAR SCHEMATIC
HT-E/HT-E-SEER

460 VOLTS, 50/60 Hz, 3-PHASE

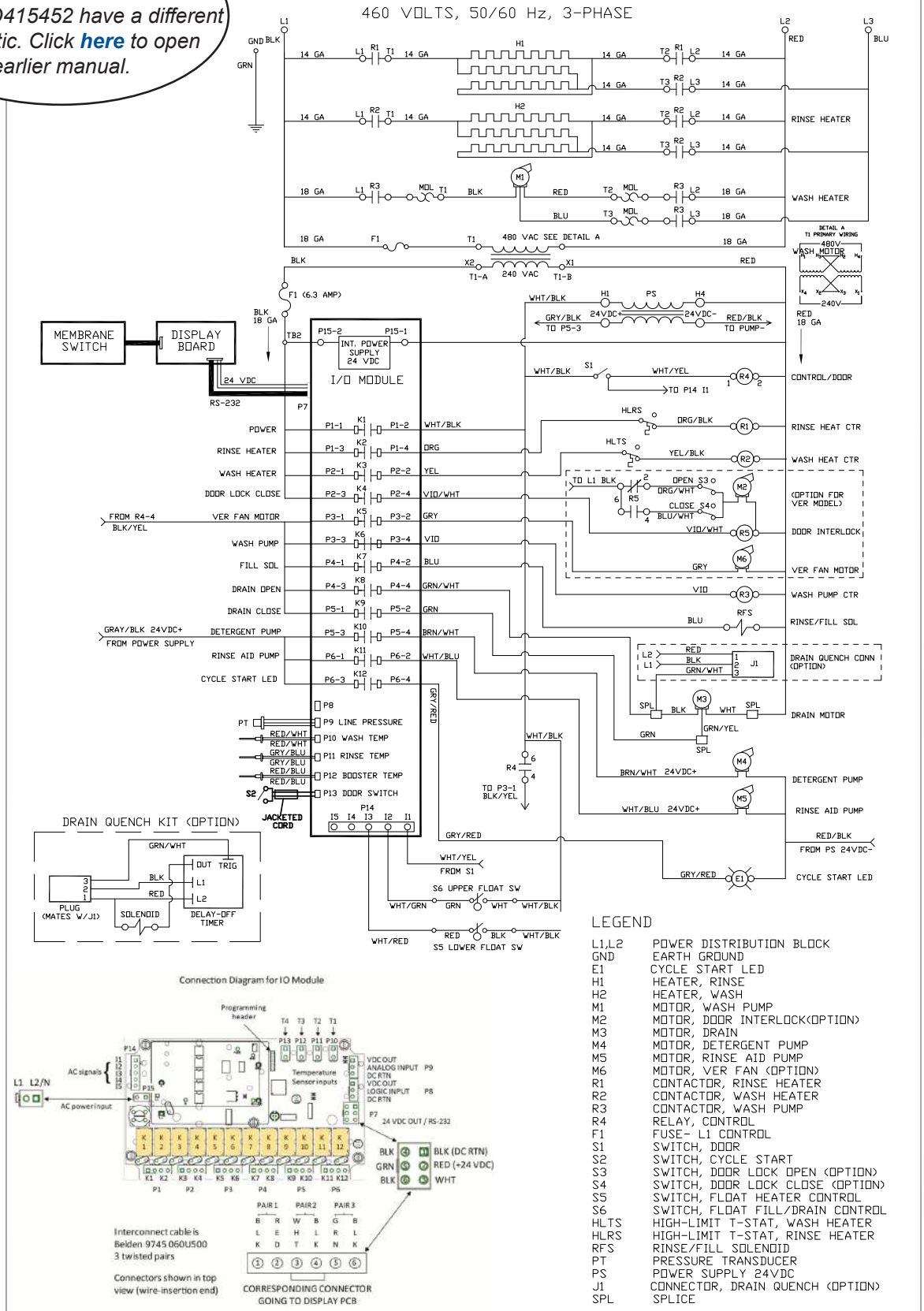

LEGEND

L1,L2	POWER DISTRIBUTION BLOCK
GND	EARTH GROUND
E1	CYCLE START LED
H1	HEATER, RINSE
H2	HEATER, WASH
M1	MOTOR, WASH PUMP
M2	MOTOR, DOOR INTERLOCK(OPTION)
M3	MOTOR, DRAIN
M4	MOTOR, DETERGENT PUMP
M5	MOTOR, RINSE AID PUMP
M6	MOTOR, VER FAN (OPTION)
R1	CONTACTOR, RINSE HEATER
R2	CONTACTOR, WASH HEATER
R3	CONTACTOR, WASH PUMP
R4	RELAY, CONTROL
F1	FUSE- L1 CONTROL
S1	SWITCH, DOOR
S2	SWITCH, CYCLE START
S3	SWITCH, DOOR LOCK OPEN (OPTION)
S4	SWITCH, DOOR LOCK CLOSE (OPTION)
S5	SWITCH, FLOAT HEATER CONTROL
S6	SWITCH, FLOAT FILL/DRAIN CONTROL
HLTS	HIGH-LIMIT T-STAT, WASH HEATER
HLRS	HIGH-LIMIT T-STAT, RINSE HEATER
RFS	RINSE/FILL SOLENOID
PT	PRESSURE TRANSDUCER
PS	POWER SUPPLY 24VDC
J1	CONNECTOR, DRAIN QUENCH (OPTION)
SPL	SPLICE

Jackson WWS, Inc. • 6209 N. US Hwy 25E • Gray, KY 40734 USA
1.888.800.5672 • www.jacksonwws.com